TEST GEAR FOR HAMS

Popular Electronics®

SEPTEMBER 1993

BUILD A TELEPHONE SCRAMBLER

Ensure the privacy and security of your telephone conversations with this easy-to-build telephone accessory

COMPUTER VIRUSES: SCOURGE OR SCAM?

Cut through the hype and the scare tactics and learn what computer viruses are, what they do, and how you can protect yourself against them

TWO TEST TOOLS TO TACKLE

Two versatile, useful pieces of test gear that even a novice can build in just a few hours

3 NEW FactCards IN THIS ISSUE

A GERNSBACK PUBLICATION

$3.50 U.S.
$3.95 CANADA

09
0 71896 48784 8

SPECIAL ANNOUNCEMENT

MOHAWK-ENVIRONMENTAL SERVICES

ELECTRONIC, AND MECH ENGINEERING DESIGNS

NEW SWITCH-CHARGER

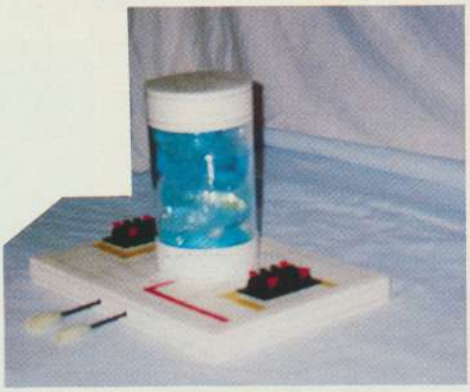

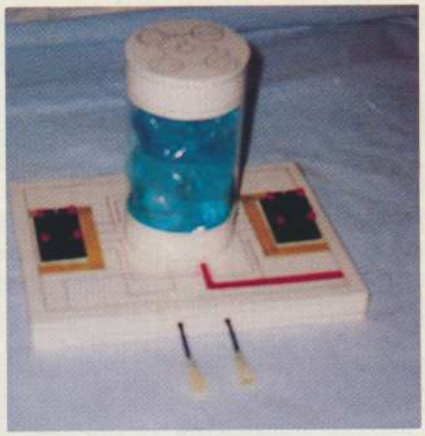

After a long period of research and development, Mohawk Engineering announces a revolutionary new switch and charging system. This new switch will allow a battery system of any type to supply power to a load or device while automatically and simultaneously allowing the battery to recharge itself. While hard to believe, it is true. Now you can find out for yourself! We are offering technical plans and complete blueprints for $100 per set (shipping and handling included). Just fill out the coupon below and enclose payment. We accept check, or money order.

MOHAWK ENVIRONMENTAL SERVICES
P.O. Box 5853
Springfield, MA 01101

TOTAL AMOUNT ENCL. $_____

NAME _____

ADDRESS _____

CITY/STATE/ZIP _____

CIRCLE 10 ON FREE INFORMATION CARD

SEPTEMBER 1993, VOLUME 10, NO. 9

Popular Electronics®

THE MAGAZINE FOR THE ELECTRONICS ACTIVIST!

CONSTRUCTION ARTICLES

BUILD A TELEPHONE SCRAMBLER ..... *Terry J. Weeder* 31
Keep your telephone conversations secure with this easy-to-build and use project

A LOW-COST ELECTRONIC DOORBELL ..... *Darren Yates* 41
Replace that non-working doorbell with this low-cost, expensive-sounding circuit

TWO TOOLS TO TACKLE ..... *James E. Tarchinski* 45
Easy for a novice, useful for even an expert, these two test tools can be built in just a few hours

BUILD A TEST-BENCH AMPLIFIER ..... *Luther Stroud* 47
Add this versatile troubleshooting aid to your test-bench arsenal

FEATURE ARTICLES

COMPUTER VIRUSES: SCOURGE OR SCAM ..... *Karl T. Thurber Jr.* 35
Cut through the hype and scare tactics to learn the truth about computer viruses

TEST GEAR FOR HAMS ..... *Karl T. Thurber Jr.* 53
Modern test gear makes keeping your ham shack in peak operating condition a snap

WIRE! ..... *Charles Hansen* 59
Learn what separates different types of wire and cable, and how to select the right one for your application

ALL ABOUT PHASE-LOCKED LOOPS ..... *Robert A. Young* 63
Find out how PLL's work, and how to use them in your own designs and projects

PRODUCT REVIEWS

GIZMO 5
Including: Sharp ViewCam, Sony Multimedia Upgrade and Desktop Library, Universal Electronics Universal Remote, and more

HANDS-ON REPORT 22
Wavetek AC30A Clamp Meter

PRODUCT TEST REPORT ..... *Len Feldman* 27
Minolta Hi-8 Video Camcorder

COLUMNS

ANTIQUE RADIO ..... *Marc Ellis* 66
From hard rubber to catalin

COMPUTER BITS ..... *Jeff Holtzman* 68
Real programmers use BASIC

CIRCUIT CIRCUS ..... *Charles D. Rakes* 69
Safety first

THINK TANK ..... *John Yacono* 72
Off to the "Derby"

DX LISTENING ..... *Don Jensen* 80
Cutbacks hit shortwave broadcasters

HAM RADIO ..... *Joseph J. Carr* 82
You asked for it!

SCANNER SCENE ..... *Marc Saxon* 84
Scanning for S.O.S. calls

DEPARTMENTS

EDITORIAL ..... *Carl Laron* 2
LETTERS 3
FACTCARDS 49
POPULAR ELECTRONICS MARKET CENTER 50A
FREE INFORMATION CARD 51
ELECTRONICS LIBRARY 86
NEW PRODUCTS 88
ELECTRONICS MARKET PLACE 95
ADVERTISER'S INDEX 98

Popular Electronics (ISSN 1042-170X) Published monthly by Gernsback Publications, Inc., 500-B Bi-County Boulevard, Farmingdale, NY 11735. Second-Class postage paid at Farmingdale, NY and at additional mailing offices. One-year, twelve issues, subscription rate U.S. and possessions $21.95, Canada $28.84 (includes G.S.T. Canadian Goods and Services Tax Registration No. R125166280), all other countries $29.45. Subscription orders payable in U.S. funds only, International Postal Money Order, or check drawn on a U.S. bank. U.S. single copy price $3.50. © 1993 by Gernsback Publications, Inc. All rights reserved. **Hands-on Electronics** and **Gizmo** trademarks are registered in U.S. and Canada by Gernsback Publications, Inc. **Popular Electronics** trademark is registered in U.S. and Canada by Electronics Technology Today, Inc. and is licensed to Gernsback Publications, Inc. Printed in U.S.A.

Postmaster: Please send address changes to **Popular Electronics,** Subscription Dept., P.O. Box 338, Mount Morris, IL 61054-9932.

A stamped self-addressed envelope must accompany all submitted manuscripts and/or artwork or photographs if their return is desired should they be rejected. We disclaim any responsibility for the loss or damage of manuscripts and/or artwork or photographs while in our possession or otherwise.

As a service to readers, **Popular Electronics** publishes available plans or information relating to newsworthy products, techniques, and scientific and technological developments. Because of possible variances in the quality and condition of materials and workmanship used by readers, **Popular Electronics** disclaims any responsibility for the safe and proper functioning of reader-built projects based upon or from plans or information published in this magazine.

Popular Electronics®

Larry Steckler
EHF, CET
Editor-In-Chief and Publisher

EDITORIAL DEPARTMENT

Carl Laron
Editor

Robert A. Young
Associate Editor

John J. Yacono
Associate Editor

Byron G. Wels, K2AVB
Associate Editor

Teri Scaduto
Assistant Editor

Kathy Terenzi
Editorial Assistant

Marc Spiwak
Editorial Associate

Fred Blechman
Joseph J. Carr, K4IPV
Marc Ellis
Len Feldman
Jeffrey K. Holtzman
Don Jensen
Charles D. Rakes
Marc Saxon
Contributing Editors

PRODUCTION DEPARTMENT

Ruby M. Yee
Production Director

Karen S. Brown
Production Manager

Marcella Amoroso
Production Assistant

Lisa Rachowitz
Editorial Production

ART DEPARTMENT

Andre Duzant
Art Director

Injae Lee
Illustrator

Russell C. Truelson
Illustrator

Jacqueline P. Cheeseboro
Circulation Director

Michele Torrillo
P-E Bookstore

BUSINESS AND EDITORIAL OFFICES

Gernsback Publications, Inc.
500-B Bi-County Blvd.
Farmingdale, NY 11735
1-516-293-3000
Fax: 1-516-293-3115
President: **Larry Steckler**

Subscription
Customer Service/Order Entry

1-800-827-0383
7:30 AM – 8:30 PM EST

Advertising Sales offices listed on page 98

Cover photography by Diversified Photo Services

Composition by
Mates Graphics

ABC AUDITED

Since some of the equipment and circuitry described in POPULAR ELECTRONICS may relate to or be covered by U.S. patents, POPULAR ELECTRONICS disclaims any liability for the infringement of such patents by the making, using, or selling of any such equipment or circuitry, and suggests that anyone interested in such projects consult a patent attorney.

EDITORIAL

HDTV: A STEP CLOSER

The long awaited beginning of High Definition TV (HDTV) broadcasting took a giant step forward this past May when the proponents of the three most promising systems set aside their differences and agreed to work together to develop one state-of-the-art standard. As a result, HDTV broadcasts could begin as early as 1995.

The alliance became necessary when, after extensive testing, the FCC decided that all of the proposed HDTV systems still under consideration required more work before they could be adopted. Further, the rival groups were encouraged by the FCC to bury their differences to avoid the expense and delay that another round of testing would require, and to avoid facing the nearly inevitable litigation from the losers of the competition.

There are, however, still some hurdles to be dealt with. A prototype joint system must still be built, tested, and submitted to the FCC for approval. Once approved, each television station would be given an additional channel assignment and would be required to begin broadcasting HDTV within five years. Fifteen years after the standard has been adopted, all NTSC broadcasting is to cease.

The agreement is a victory for U.S. technology. While two non-U.S. companies (Thompson and Philips) are part of the alliance, the remainder are U.S. companies (including Zenith, General Instruments, and AT&T) and institutions (MIT). It is also a case where being second means finishing first. You may recall that Japan has had HDTV for several years now. However, their analog standard has been largely rendered obsolete by digital technology (the U.S. systems will be all digital) and is sure to be replaced sometime in the future.

However, winning the technology race is one matter; having that victory result in more jobs is another. The technology will have to be licensed to anyone who wants to build HDTV sets, and the U.S. lags badly behind its international competitors in manufacturing costs. That may not be that big a problem initially, when first generation sets could cost upwards of $2000, but prices, and profit margins, are sure to rapidly fall. That's when keeping jobs here will again be a challenge.

Carl Laron
Editor

LETTERS

SORRY, WRONG ADDRESS

An error appeared in the ordering information for the book Heath Nostalgia, *which was reviewed in* Electronics Library *in the June 1993 issue. The correct address is* Heath Nostalgia, *4320-196th S.W., Suite B-111, Lynnwood, WA 98036. We are sorry for any inconvenience that this may have caused.—Editor*

WATCHING THE BIRDIES

Finally, an accurate and objective article about TVRO has appeared in my favorite magazine, **Popular Electronics**. What a thrill it was to read the article, "200 Channels to Choose From," and the *Gizmo* section devoted to satellite TV (June, 1993).

I have been a satellite viewer for about ten years, and I'm totally spoiled by all the programming. I love TVRO so much that I became a certified satellite installer through the Electronics Technicians Association. I'm also a CET. I have taught classes in TVRO to certify others, and I am very pleased at the simple and straight-forward way that the articles were presented.

I would also like to add a point about the diversity of the programming available on TVRO. Intelsats that link other continents also can be viewed with C-Band TVRO, but have a circular polarization. In order to convert from a horizontal/vertical polarization to circular, a circular wave guide can be inserted into the focus ring of the wave guide.

The International Telecommunications Union (ITU) in Geneva, Switzerland, has a book called *World Communications* available at no cost. It tells of the progress of worldwide telecommunications companies in their efforts to reach future goals. They also have a beautiful picture chart that shows some 300 geosynchronous orbiting satellites (plus another 3000 satellites that are non-geosynchronous, but unfortunately not listed). Both the book and the poster are free upon request.

Thanks again for a breath of fresh air—or should I say "sky?"
S.P.
Jamestown, CA

While I rather enjoyed the article "200 Channels to Choose From" in the June 1993 issue, I need to remark on a factual error.

The article refers to NASA's ECHO I as "the first active communications satellite." In fact, the ECHO I and II were metallized plastic (perhaps mylar) balloons that were inflated (to about 30-meters diameter) in orbit to serve as *passive* RF *reflectors*. ECHO I, launched August 12, 1960, was, indeed, the first communications satellite, but it did not carry active transponders or repeaters (or so claim both my fallible memory and my reference books).

The first active repeater (and, incidentally, the first use of solar cells for electrical power) was aboard the Courier 1b, flown October 4, 1960. Those early satellites were soon followed by NASA's RELAY series and the similar AT&T TELSTARS, and by the Syncom 1 (which failed to operate properly).
W.C.D.
Washington, DC

ELECTRIC CAR AVAILABILITY

I applaud your efforts to investigate electric cars in *Gizmo* (**Popular Electronics**, April 1993). However, after reading the article, I feel compelled to correct some dire misinformation found therein. The article states that "No electric cars are, after all, commercially available ... it will be some time before the bugs are worked out." That simply is not true.

Electric cars are commercially available from at least a dozen small, independent sources across the country. None of the arrogant "Big Three" are selling them yet, but that only shows how self-important (and far behind) they are. For practical use as freeway-capable commute cars in a 30–60-mile daily range, the bugs are complete worked out. That is not to say, however, that improvements cannot be made as better power-storage devices, motors, etc., become available.

At the end of the article, the authors question how costly such cars might be to use. Obviously, not the slightest bit of research was done before answering that question. Even at the highest utility rates in the country, electric cars cost roughly half as much per mile to "tank up" as do gasoline-powered cars. On the average, an electric vehicle costs about three cents a mile to charge, while a gas car costs about eight cents a mile to fuel. In addition, the cost of the pollution produced by the gas car makes such a comparison essentially ridiculous.

I would also like to express my extreme dismay at hearing how manufacturers (meaning in this case huge auto companies) will abandon true regenerative braking and the fact that electric cars at rest (such as in traffic) use no power at all, in favor of the idiotic concept that in order to sell, the cars must mimic those powered by internal combustion engines, which are most wasteful when the car is idling and only 10% efficient at best.
J.S.
Hilo, HI

Electric vehicles are not necessarily as inexpensive to operate as you suggest. Take, for example, the Saturn electric vehicle. At a constant speed of 60 miles per hour, the car consumes 250 watt-hours per mile. At our local electric rates of 15-cents per kilowatt hour (an average of our day- and night-time rates), the Saturn would cost about 3.75 cents per mile. In highway driving, our car can travel about 30 miles on a gallon of fuel. At the current rate of $1.15 per gallon, our car uses about 3.8-cents worth of fuel per mile. Further, an electric vehicle can't just be plugged into any socket and the installation cost for the required wiring must be factored in.

But, as you suggest, the pollution reduction is significant and hard to put a price on: Ozone and volatile organic compounds are cut by more than 99% with electric vehicles. Carbon dioxide is cut by about half. Nitrogen oxides are cut by about 25%. Only sulfur dioxide is increased, but by a factor of eight.

Car manufacturers are not abandoning regenerative braking, but are just experimenting with different ways to implement it. Mimicking the feel of gasoline-powered cars doesn't necessarily reduce the efficiency.—Gizmo Editor

PHOTO PHOBIA

Readers of Antique Radio may have noticed that something was missing last month (August, 1993). The photo above is the one that was to have appeared on page 67. We are sorry for any inconvenience that this may have caused.—Editor. ■

How to Get a High-Paying Job In Electronics

Launch your career as an electronics professional.

Your key to career success and personal happiness can be summed up in one word. . . EDUCATION!

Thousands of great jobs become available in electronics every year. To land one of those great jobs, you must have the educational credentials, knowledge and skills that employers not only want and need, but also demand.

Let Peoples College prepare you for an exciting job and a secure future in electronics.

Peoples College offers Specialized Associate Degree and Diploma programs by distance education to prepare you for one of the many high-paying electronics jobs. As a graduate of one of our programs you can qualify for jobs such as field service engineer, electronics technician, laboratory assistant, PC specialist and many others.

Peoples College offers you an outstanding educational alternative. Our programs are equivalent to what you would get in a techincal school or community college. In addition to providing you with a rock-solid foundation in electrical and electronic fundamentals and computer concepts, we offer in-depth training in these specialties:

- Personal computer servicing
- Communications electronics
- Industrial control

Distance learning—Peoples College comes to you.

With distance education, you learn in your own home at your convenience. There are no classes to prepare for, no commuting, no parking problems. You can complete our programs in your spare time without giving up your present job. Learn while you earn. You go as fast as you want. Our instructors are standing by to answer your questions if you need help.

What makes Peoples College programs so special?

While there are other schools offering similar training, ours is unique! Here are just a few reasons why Peoples College programs give you more:

- Standard college texts, not lessons
- Video training which makes critical subjects come alive
- Accelerated Learning System—a scientifically proven study system that lets you learn faster and easier than ever before
- Computer-based training software for selected software subjects
- Industry certification preparation

Here is a partial list of some of the hardware you receive with a Peoples College program:

- 486sx 25 MHz PC with 80 MB hard drive, 3.5" 1.44 MB floppy drive, VGA color monitor and mouse in selected programs
- Microprocessor trainer (8-bit CPU), digital multimeter, breadboard with function generator, power supplies and logic probe
  - Oscilloscope included in some programs
  - Portable cellular telephone in the communications programs
  - All programs include Electronics Experience Labs for hands-on training

Don't delay—Your future starts today! For more information fill out and mail the attached coupon.

We'll send you our color brochure, catalog and our new booklet "How to Get a High-Paying Job in Electronics." Get your career started today. Do yourself a big favor and send for this information now!

PEOPLES COLLEGE
OF INDEPENDENT STUDIES

233 Academy Drive • P.O. Box 421768
Kissimmee, FL 34742-1768
Accredited member, National Home Study Council
Member, D.L. Peoples Group

YES, I would like to know more about your programs!

☐ **Check here if you want details on our programs approved under the GI Bill.**

Name _____

Address _____

City _____

State _____ **Zip** _____

Phone (_____ **)** _____

EO993

CIRCLE 13 ON FREE INFORMATION CARD

GIZMO®

SEPTEMBER 1993

VOLUME 6, NUMBER 9

A CHRONICLE OF CONSUMER ELECTRONICS

In Your Face—Not!

HI8 VIEWCAM MODEL VL-HL100U. Manufactured by Sharp Electronics Corporation, Sharp Plaza, Mahwah, NJ 07430-2135. Price; $2199.

Many people tell us that they "just don't like using camcorders." When pressed to be more specific, the complaint we most frequently hear is that with one eye pressed up to an eyepiece, you distance yourself from the real action of the party or event that you're recording. Folks who must wear eyeglasses face the added dilemma of having to choose between seeing well through the viewfinder, or being able to clearly see the big picture. And those who aren't naturally endowed with a sixth sense about electronics, or those who record only occasionally, also gripe that, with their sight focused on the subject, they have a hard time distinguishing between all the various controls by touch alone.

The eyepiece dilemma might be at the top of the list, but it's not the only grievance we've heard. Short people have difficulty catching all the action when holding the camcorder at eye level, and even tall videographers have found themselves recording the back of someone's head instead of the on-field action when the crowd gets on its feet to cheer an exciting play. Women and teens with small hands have trouble getting a comfortable one-handed grip on even the most compact camcorders around. Finally, we often hear people wishing for an easy way to immediately view—and hear—the footage they've just taped.

We don't dislike camcorders, but we do empathize with all of those complaints. You can't get in on the dancing if you're recording the gyrations of others, and if your tunnel vision is focused on the batter, you'll probably miss that stolen base. Each time we get a new camcorder in for review, we find ourselves fumbling blindly at its buttons for the first few minutes. We do wear glasses (except when using a camcorder), we've had our view blocked on several occasions by tall obstacles, and one of us has very small hands.

Sharp's new Hi8 camcorder remedies each and every one of those problems with a truly unique approach—it has no eyepiece! Instead of the standard viewfinder, the *ViewCam VL-HL100U* camcorder has a 4-inch diagonal, color LCD screen. So, although you are still *watching* the event instead of actively participating, the feeling of isolation is alleviated. Because the camcorder isn't pressed up against your face, you can remain aware of the big picture while monitoring what's being recorded.

In the past decade or so, Sharp has taken a very active role in LCD research and development. Today, the company is the undisputed leader in LCD manufacturing. The ViewCam's monitor is a good example of Sharp's expertise. Its picture is clear, crisp, and easy to see from a distance of an arm's length or several feet. Should colors fade out in bright sunlight, that can be easily remedied by adjusting the backlight and picture controls.

The LCD monitor is not the only thing to set the ViewCam apart from the crowd. As you might expect, it looks nothing like a regular camcorder. The ViewCam has two distinct sides: One side houses the battery compartment and the lens, while the other contains the tape compartment and LCD screen. The ViewCam's two sides are connected by a variable-angle rotating system, which, while not as technologically impressive as the screen, is just as vital in liberating the videographer. The rotating system allows the screen to swivel up to 270 degrees from the lens. That means that you can keep the lens pointed at the action while holding the camcorder comfortably at waist level. Or, in a crowd, you can hold the ViewCam way up above your head and keep the screen tilted down to show you all the action. You can also record yourself, by twisting the screen 180 degrees. Don't worry about viewing yourself upside-down—when the screen is flipped over, the image automatically rights itself.

The basic camcorder controls are located on the lens side: the wide-angle/telescopic buttons, the record start/stop button, toggle switches for lock/standby modes and VCR/off/camera modes, and a few buttons used to activate special features while recording. The lens side is also

TURN PAGE FOR CONTENTS

This month in GIZMO®

Sharp Hi8 ViewCam Model VL-HL100U ..... pg. 5

Sony Desktop Library System Multimedia Upgrade Kit..... pg. 7

CD-ROM Software ..... pg. 8

Universal Electronics VCRPRO 4 VCR Programmer/Universal Remote..... pg. 10

Baltek Audio's Baltic 30 Loudspeaker System ..... pg. 11

Microscan Laboratory's Microscan Anti-Resonant Systems..... pg. 12

Electronic Word Games..... pg. 18

Three-Piece Speaker System . pg. 18

TV/VCR Combination ..... pg. 18

VCR with VCR Plus+ ..... pg. 18

Casio Keyboard ..... pg. 19

Flip-Top Watch ..... pg. 19

Rotel Turntable ..... pg. 19

Two-Channel FM Handheld Transceivers ..... pg. 19

Audio/Video Mixer ..... pg. 20

CD-Length Blank MiniDisc .... pg. 20

Disc Organizers ..... pg. 20

Voice Scrambling Cordless Telephone ..... pg. 20

Gizmo is published by Gernsback Publications, Inc., 500-B Bi-County Blvd., Farmingdale, NY 11735. Senior Writers: Chris F. O'Brian and Teri Scaduto.

©Copyright 1993 by Gernsback Publications, Inc. Gizmo is a registered trademark. All rights reserved.

home to a built-in microphone and a jack for an external mike.

The ViewCam's LCD side contains the tape compartment and a host of VCR controls. Those are needed because the LCD monitor is much more than just a big viewfinder—with its built-in speaker, the ViewCam also can serve as a portable VCR on which to view the footage you've just taped, rented 8mm movies, or anything you might have recorded from another video source. (Since most hotels make it difficult or impossible to hook a camcorder to the TV, it's a great feature when vacationing.) You can connect the ViewCam to a TV, VCR, or laserdisc player to record your own 8mm tapes. On a family vacation, for instance, during those long stretches of highway driving when there's nothing worth taping and the kids are starting to whine, you can simply pop in a movie for them to watch in the back seat. (The only thing lacking is a built-in TV tuner.)

The ViewCam is very easy to use, although it takes some getting used to if you're accustomed to a regular palm-sized camcorder. Because of its unique configuration, you don't even hold the ViewCam the same way; there's no strap to slide your hand into. One-handed operation, grasping the lens portion with the right hand, is possible. But we almost always held the LCD side with the left hand as well, for better balance and stability and to reduce fatigue. (The ViewCam weighs 2.8 pounds with the battery pack and a tape installed.) The wide-angle and telephoto buttons are located behind the lens (where you'd expect to see the eyepiece), and they are operated with the thumb. The record and standby buttons, which you'd press with your thumb on a standard camcorder, are located in the front of the ViewCam, just below the lens, and accessible to your index finger.

It's different, but it's certainly not difficult to use. Without having your eye plastered to a tiny viewfinder, it's easy to see every control button as you're recording.

The three other buttons found on the lens side are also easy to reach with your thumb. The Digital Image Stabilization system is activated by pressing the DIS button. The system compensates for slight hand movements that are often made when using a small camcorder and are especially noticeable when zoomed in on a subject, but picture quality is slightly degraded and battery life shortened when DIS mode is engaged. We would definitely recommend it for one-handed taping and on close-ups. Just above the DIS button is the STILL/STROBE button, which activates recording of either still images or a strobe effect. When the third button, labeled SNAP, is pressed with the ViewCam in its record/standby mode, a five-second still "snapshot" is recorded, with normal sound in the background.

The rest of the controls are grouped above and below the LCD screen. At the

The ViewCam's variable-angle rotating system lets you see—and tape—all the action that would otherwise be blocked by a crowd of tall people.

top of the ViewCam's LCD section are buttons used to set the clock and calendar and to insert the time and date at the beginning of recordings. Those same buttons are used to call up an on-screen menu that's used during editing and recording from an outside source. Above the screen are buttons used to adjust the picture (color, tint, and brightness) and the volume. Just below the screen are VCR control buttons—rewind, play, fast forward, stop, and pause. A row of corresponding icons appear on screen, with the current mode highlighted in green, unless you press the MODE DISPLAY button to turn it off. When in camcorder mode, those buttons double as manual-control buttons, providing access to near and far power focus, white balance, high-speed shutter, and auto or manual focus. At the very bottom of the LCD side is another row of buttons that includes REC, for recording from an external source; INDEX SEARCH, which lets you automatically return to record mode after you've viewed what was just recorded; FADER, which fades the image to and from white between scenes; and FULL AUTO, the fully automatic, point-and-shoot mode.

The ViewCam's unique configuration lends itself to all sorts of applications beyond the scope of standard camcorders. For instance, we used it to view and catalog a stack of 8mm tapes that had piled up, unlabeled, over the past couple of years. Then we brought it to our friend's house, to show them the footage starring them and their kids. Several people can watch at once (although off-axis viewing of the LCD is not good), and the built-in kickstand makes it easy to prop the screen at a comfortable viewing angle.

Next, we *finally* got around to editing some of those 8mm tapes onto VHS tapes. One reason that we don't edit tapes at home on a regular basis is simply due to inconvenience. Editing requires bringing together two sets of video monitors and VCR's. Without a dedicated setup, the process is a hodgepodge of cables and precariously balanced equipment. The

ViewCam—being a monitor and a VCR rolled into one—makes the process far more convenient. Although it lacks the features essential for a true editing deck, its ease of use is hard to ignore. One thing's for sure: An edited tape with rough edges definitely beats an unedited tape!

Sharp offers several other suggestions on how to put the ViewCam to use. Athletes can use it as a "personal coach," taping and immediately viewing their performance to see what they're doing right or wrong. Spectators can get their own "instant replays" of controversial calls or plays. Business folks could put the ViewCam to work in on-the-road sales calls or presentations, where they wouldn't usually have access to a video monitor. After all, the ViewCam fits easily in a briefcase.

Without an eyepiece pressed up to your face, you can watch your subject on the ViewCam's color LCD monitor and still enjoy the "big picture" of your surroundings.

We tended to use the ViewCam, for the most part, as we would any other camcorder—taping the kids playing Frisbee with the dogs at a neighborhood get-together, recording the antics of our cats. Under such ordinary circumstances, it performed quite well. The anti-glare LCD panel is easy to see even in bright sunlight, both during recording and during playback. It's large enough for several people to see at once from a distance of several feet, although viewing from an angle is difficult. It also has a tendency to pick up dirt and fingerprints, and could potentially be damaged by scratches. (A special cloth is provided for cleaning the screen without damaging it.) The wireless remote control came in handy during recording, as it allowed the videographer to get in the picture and still retain some control.

It might not have all the bells and whistles associated with other camcorders in its price range, but the ViewCam does provide all the basics: an 8× power zoom lens; hi-fi stereo recording (mono-only playback through its single speaker); im-

(Continued on page 16)

CIRCLE 51 ON FREE INFORMATION CARD

Silence Not Required in This Library

DESKTOP LIBRARY SYSTEM MULTIMEDIA UPGRADE KIT CDU7305. From Sony Corporation of America, One Sony Drive, Park Ridge, NJ 07656. Price: $1069.95.

Multimedia—combining audio, graphics, and text for computer presentation—has been a buzzword in computer circles for some time. Each of the last three years has been dubbed "The Year of Multimedia" or some similar moniker by the computer industry's leading publications. But if you're like most people, you don't have a multimedia PC or MPC. *Sony's Desktop Library CD-ROM System* might be the easiest way to upgrade your PC to a multimedia PC.

If questions from friends and readers are a reliable guide, upgrading a PC to a multimedia system is deceptively difficult. (Most people seem to have trouble getting a sound card and a CD-ROM drive—the two fundamental hardware devices that make a multimedia PC different from a standard PC—working together seamlessly.) The Desktop Library system, however, is relatively easy to set up—and that is one of its strengths. The Sony Desktop Library CD-ROM system actually contains nothing that can't be bought separately. But it is packaged in a sensible way with good documentation. And the Desktop Library provides everything needed to get multimedia software up and running—including six CD-ROM multimedia titles!

Three versions of the Desktop Library system are available. The least expensive is the *CDU31A-LL/N Multimedia Starter Kit*, which has a suggested list price of $499.95. That package consists of an internal Sony CD-ROM drive, GeoWorks CD-ROM Manager, Tempra Access Photo CD software, and two multimedia titles: The New Grolier Multimedia Encyclopedia, and Great Wonders of the World Volume 1. (The software supplied with each version of the Desktop Library is reviewed briefly following our hardware description.)

The second version of the Desktop Library is the *CDU31A-LL/L Complete Multimedia CD-ROM System*. It differs from the previously mentioned system in that it includes a 16-bit sound board, speakers, and three additional multimedia CD-ROM titles: Where in the World is Carmen Sandiego? (CD-ROM Deluxe Version), The Presidents: It All Started With George, and the 1991 TIME Magazine Compact Almanac. Its suggested list price is $849.95

The version that we tried was the *CDU7305 Complete Multimedia CD-ROM System*. It differs from the previous system only in that its CD-ROM drive is an external model. (Although the drives are supplied in both external and internal versions, the "guts" of the drives are the same—only their appearance, power supply, and connecting cables are different.) The suggested price of the CDU7305 is $1069.95. Let's look at the CD-ROM drive in detail.

If you're thinking of upgrading to MPC compatibility without buying a complete upgrade such as the Desktop Library, be careful! Some CD-ROM drives have an average access time of 550 milliseconds and might have a quoted data transfer rate of 150 kilobytes per second. But that doesn't mean that they're multimedia compatible! If a buffer doesn't permit that

CD-ROM SOFTWARE

The New Grolier Multimedia Encyclopedia

One of the driving forces behind multimedia is education. People will remember only so much of what they read on paper. But add sound to reinforce the text, and retention is increased. Add video as well, and retention gets better still. That's the idea behind the New Grolier Multimedia Encyclopedia. The latest version contains more text and video than ever. There are over 250 maps and more than 3000 images throughout the more than 33,000 article entries.

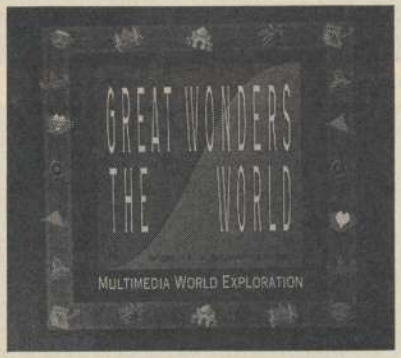

Great Wonders of the World

What have been the greatest physical triumphs of human achievement? This disk, Volume 1, takes you from the canals of Venice to the Empire State Building, from the great pyramids of Egypt to the Great Wall of China. Other great wonders described include the Trans-Siberian Railway, the Taj Mahal, the Panama Canal, Chartres (a 13th-Century Gothic cathedral), and Angkor Wat (a Khmer temple). Maps, diagrams, histories, and more are brought to life through graphics, text, photographs, animation, video, and audio.

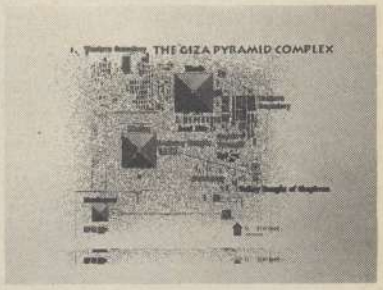

The Presidents: It All Started With George

From George Washington to George Bush, this disc from National Geographic Educational Services is an interactive encyclopedia. It contains information on the personal and political lives of the U.S. presidents. More than 1200 photographs are included, and famous moments are presented in video. (You can, for example, watch some footage of Nixon's visit to China.) Election maps and essays, a multimedia time line, and a game are some of the teaching tools provided on-disc.

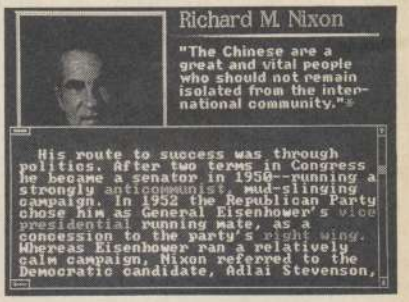

data-transfer rate to be sustained without taxing the processor, you won't be happy with the results. Motion video will appear choppy, and audio files will not play smoothly. Some astounding values are available on older CD-ROM drives. But if you want to use it for multimedia and not for data access, make sure that the drive that you are considering is MPC compatible before you buy it.

The CD-ROM drive that is supplied with the Desktop Library is no slouch. Most important, it's MPC-compatible. The drive has an average random-access time of 550 milliseconds and a 64-kilobyte buffer. What all of that means is that the drive can sustain a data-transfer rate of 150 kilobytes per second without using more than 40% of the computer's processing power.

The Sony Desktop Library's CD-ROM drive can't boast the double-speed performance that is available on some newer, more expensive models. But it can boast *multi-session* Photo CD compatibility. Many less expensive drives are single-session Photo CD compatible—meaning they can access the first set of images stored on the disc, but can't read the successive writes to the disc. Photo CD is the biggest thing to happen in desktop publishing this decade. With it, you can import high-resolution (24-bit) color images and use them in your applications.

The Sony drive features a slide-out tray for loading the discs. It's not as smooth as the motorized drawers found on audio CD players, but it sure beats the caddy used in many drives.

Sound quality is another vital component of multimedia. Sony's CD-ROM drive can also play standard audio CD's under the control of included software. However, that's only one of the ways that the Desktop Library provides sound. The other is through the Spectrum 16 multimedia sound card from Media Vision that is included.

The Spectrum 16, as its name implies, is a 16-bit sound card. When compared with an 8-bit sound card, the additional quality is difficult to miss. (The difference between 8- and 16-bit sound cards has nothing to do with whether they use 8- or 16-bit slots. Rather, it refers to the number of bits used to digitize the audio. The CD audio standard also digitizes audio with 16-bit resolution. That doesn't mean that all audio played back on a 16-bit card will be CD quality. The rate at which the audio

CD-ROM SOFTWARE (cont.)

TIME Magazine Compact Almanac

An electronic version of one of the leading weekly news magazines provides an excellent review guide for the year's events. (The disc supplied with our evaluation Desktop Library was the 1991 edition.) Over 10,000 articles from *Time Magazine* are contained on the disc. Of course, *Time Magazine* isn't published as multimedia, so to complete the multimedia disc, sound and motion video from CNN are also provided, along with more than 200 photos, 100 charts, and 400 tables from the *U.S. Statistical Abstract*.

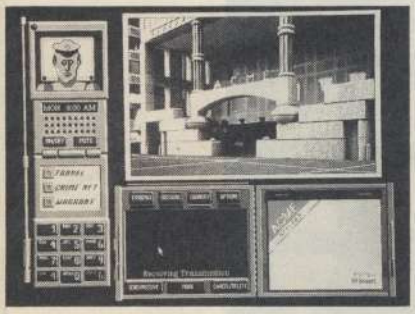

Where in the World is Carmen Sandiego?

We often find ourselves watching the Public Television show of the same name. The CD-ROM version of the game (the Deluxe Version) has extensive animation and audio. This disc is sure to keep kids following Carmen and her gang of ten villains as she traipses around the world trying to avoid all of the gumshoes at the Acme Detective Agency. Over 60 countries are covered in this version; the disk contains location photos, folk-music selections, sound effects, and multiple difficulty levels.

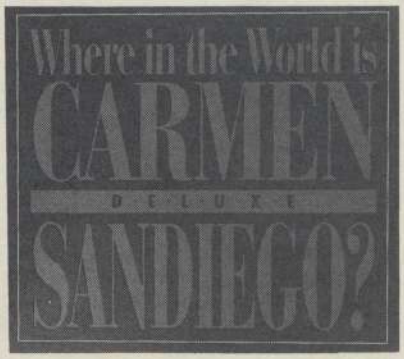

GeoWorks CD-ROM Manager

Not multimedia software in itself, the GeoWorks CD-ROM Manager provides a Windows-like environment that makes it easy to launch all of the multimedia packages in the Sony Desktop Library system by pointing to icons and clicking a mouse button. Also included on the disc is Tempra Access Photo CD software, which lets you import digital images from Kodak Photo CD's for use in desktop publishing and other applications. ■

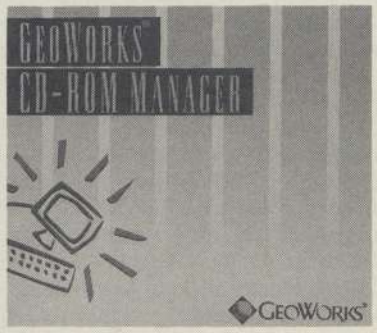

is sampled also determines the quality. But the higher the sampling rate of an audio file, the more disk space it uses.) As software publishers continue to produce multimedia titles that take advantage of 16-bit cards, the difference will become even more dramatic. The Spectrum 16 is compatible with the Sound Blaster and AdLib cards, which makes it compatible with a large library of existing software.

A stand-alone version of the Spectrum 16 (the Pro Audio Spectrum) is available from Media Vision. The difference is that the card supplied with the Desktop Library also contains a controller for the Sony CD-ROM drive.

As we mentioned previously, trying to get a sound card and a CD-ROM drive working in harmony is a common cause of frustration for multimedia PC users. Perhaps that's because more people aren't using the Desktop Library. Our installation went very smoothly.

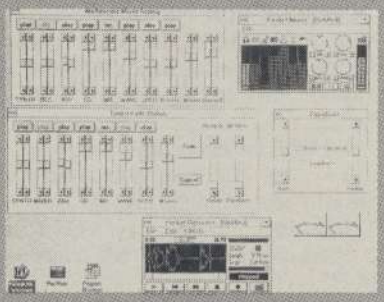

The Spectrum 16 is supplied with a number of utilities that permit audio to be mixed, faded, recorded, and stored.

The first step is to connect the sound board to the external-drive adapter with a length of ribbon cable and a four-wire audio cable. (On internal-drive versions of the Desktop Library, the adapter isn't necessary—instead, the sound card is connected directly to the drive.) The sound board plugs into an available slot; the external adapter floats above the slot preferably immediately to the right. (The adapter doesn't actually plug into the slot, but attaches to the rear panel. Unfortunately, it's impossible to use the slot above which it floats for anything else.)

The external drive is connected to the drive adapter through a data cable and an audio cable. An audio output is contained at the back of the drive adapter for connection to speakers or an amplifier; audio from both the sound card and the CD-ROM drive can be output from it.

The Spectrum 16 contains no jumpers; instead, the card's I/O address and its DMA and IRQ settings are configured through software. If you set them correctly, a test confirms it. If the test runs incorrectly, the user's guide points you to the probable cause depending on the symptoms. In our experience, it does a pretty good job.

A number of DOS and Windows utilities are provided with the sound card. Here we'll cover only the Windows utilities: Pro Mixer, Pocket Mixer, and Pocket Recorder.

Pro Mixer is a control panel that provides stereo volume control over all audio sources on your multimedia PC (the on-board sound card sources, and the CD-audio and microphone inputs) and it also provides a master volume control. An equalizer is provided to control the sound card's bass and treble output. For special effects, a timed fade is available, and panning between left and right channels is also possible.

The Pocket Mixer is used to control volume and equalization settings and create mixer files to create custom multimedia presentations. Calling the mixer file will quickly reset all of your audio-level settings for different situations.

The Pocket Recorder gives you control for recording waveform data in an 8- or 16-bit format. The Pocket recorder can be used to record and play back waveform (.WAV) files from any Windows application.

Even the best sound card is nothing without some way to hear its output. Of course, it's possible to use a pair of headphones to listen to multimedia, but speakers make the experience more enjoyable. The Sony speakers supplied with the Desktop Library are ideal for multimedia. Because the speakers are magnetically compensated (or "shielded") they can't distort the image on the video monitor even if they're placed right up against it. And you can toss a floppy disk on top of a speaker without corrupting the data on it.

The speakers contain their own amplifiers and run off four "C" batteries each. The batteries are supplied with the system. The speakers can also be powered from an AC adapter, which is not included. Running the batteries down is not much of a problem because a power-save feature automatically places the speakers in a sleep mode if audio is not fed to them. As soon as sound is transmitted, they automatically turn back on.

The hardware supplied with the Sony Desktop Library system proved to be easy to set up and reliable, too. But it wasn't *fun* until we opened the package of six CD-ROM's that are included with it. See the box on pages 8 and 9 for more details on that software. ■

CIRCLE 52 ON FREE INFORMATION CARD

Programmed for Success

VCRPRO 4 VCR PROGRAMMER/UNIVERSAL REMOTE. Manufactured by Universal Electronics Inc., P.O. Box 355, Hudson, OH 44236. Price: $79.99.

It's hard to believe, as we approach the dawn of the 21st century, that many of us are still pondering the age-old questions: "How do I program my VCR?" and "Where did I put the &#*$% remote control?"

Fortunately, we needn't wait for the millennium to learn the answer to the first question. There are a host of products now on the market that, with minimal input on your part, will practically program your VCR for you. Those include a voice-activated remote control and VCR Plus+, an add-on unit that, when you input the numerical code corresponding to a particular show (codes are printed in *TV Guide* and the television pages of many local newspapers), proceeds to turn on and off the VCR record function at the appropriate date and times. Several manufacturers are now incorporating VCR Plus+ into their decks.

Universal Electronics took a somewhat different approach with their *VCRPRO 4*. It's a both a universal remote control (which comes in handy if you find yourself often asking the second question), and a simplified VCR programmer.

As a universal remote, it's intended to replace or supplement the remotes for your TV, VCR, cable box, and one other video or audio device (perhaps a CD or LD player, or a second TV or VCR). Actually, each of the four device buttons (VCR, AUX, TV, and CBL) can be programmed to operate a device other than what its label would suggest. If you wanted, you could use the VCRPRO 4 to operate four TV's, or two TV's and two VCR's. It's also useful for people whose cable systems have

scrambled all channels—without this, they'd have a hard time.

That sounds like what you'd expect from any universal remote, but the VCRPRO 4 both looks and acts different from most others we've seen. In terms of appearance, the unit features keys in a variety of shapes and sizes—number keys are shaped like numbers, device keys are round, power resembles an asterisk, etc.—making it easy to use the device by touch. Even more unusual, it has an LCD panel that prompts users in plain English. That display screen figures prominently in the simplified VCR programming offered by the VCRPRO 4, as we'll explain shortly.

If your original remotes haven't been seen in months, there's no need to worry; they aren't needed to set up the VCRPRO 4. Teaching it to operate each piece of equipment is a simple matter of looking up its three-number code (or codes) in the manual, and then programming the remote with that code. For example, for our Panasonic television, we pressed, in sequence, the keys labeled TV, SHIFT, VCRPRO and "1" followed by the code for Panasonic TV's: 051. To test it, we tried to turn on the TV. It worked on the first try, but if it hadn't, we could have tried the other two codes listed for Panasonic (055 and 054). The same basic procedure is used to set up the VCRPRO 4 to work your VCR and cable box.

Preliminary setup also requires that the correct date and time must be set. A clock appears on the LCD screen as soon as the batteries (four "AAA") have been installed. The hour, minute, and date are set using the number keys, and you can use the volume-up and -down keys to scroll through the months.

Once the time and date are set, and the unit has been set up to control your particular video equipment, you have to let the VCRPRO 4 know if you use a cable box to change channels, using a sequence of key presses described in the manual. The LCD readout will ask you for the channel to which your VCR must be set in order to view cable programming; you must respond by pressing the correct number key. At the end of the process (which takes less than a minute), you can do a test recording to ensure that you can record cable channels on your VCR. The procedure is practically the same for those who use their VCR instead of a cable box to change channels, using a slightly different key-press sequence.

The initial setup is quite easy—it was totally uneventful in our tests. And once it's done, the "hard" part is over. Setting the device to tape shows is a breeze.

No special codes are needed for taping TV or cable shows. The display screen guides you through the process, during

(Continued on page 16)

The Latvians are Coming! The Latvians are Coming!

BALTIC 30 LOUDSPEAKER SYSTEM. From: Baltek Audio, 4615 Mira Loma, Castro Valley, CA 94546. Price: $130 each.

Most people agree that we are living in a time of dramatic worldwide transition—just think of McDonald's in Red Square! But for those who would argue otherwise, here is yet another example of how much things have changed in the 1990's: High-quality loudspeakers are being imported from the former Soviet Union Republic of Latvia for sale in the U.S. by a California-based company, *Baltek Audio*. We listened to the *Baltic 30* bookshelf system. Other speakers in the line, and shown in the photograph here but not reviewed, include the Baltic 50 mid-tower design and the Baltic 90 tower.

Any mention of the Iron Curtain sounds like ancient history today. But Latvia's re-awakened free-market economy would have seemed like a far-fetched notion back before Mikhael Gorbachev's *perestroika* program of a few years back; of course, all of that has changed now. A German company interested in setting up a joint venture in the Soviet Union met with representatives from Radio Tehnika, one of the main producers of consumer-electronics goods in the old Soviet Union. The idea was to produce German-designed speakers for export to the West.

Radio Tehnika, though not well known abroad, has been around in one form or another since the 1920's. When the Baltic states were annexed by the Soviet Union, the company was nationalized. It now has more than 7000 employees.

Previously, there were other joint ventures in the Baltic states. European companies were taking advantage of a relatively well-educated, well-skilled populous. In return, the Baltic states received a technology boost through investments in factories. The Soviet manufacturing industry, of course, has been the butt of a lot of jokes both here and in the Soviet Union. Most of the consumer-electronics made for their internal consumption wouldn't stand a chance in the competitive U.S. market. But thanks to the technology imported through joint ventures, that is being actively changed. (Interestingly, the Baltek Audio speakers are not available for sale in any of the republics that made up the old

CIRCLE 53 ON FREE INFORMATION CARD

Soviet Union—they are simply too expensive.)

The Baltic 30 is a compact, two-way, bass-reflex (vented) loudspeaker. Its drivers are a 1-inch metal-dome tweeter and a 4¼-inch coated-paper woofer crossing over at 4 kHz. The cabinet is available in three finishes: teak, mahogany, or black ash. Each unit measures a diminutive 8½ × 12 × 10 inches. The speaker system weighs just under 12½ pounds. The frequency response is rated by Baltek as 40–20,000 Hz, ±3 dB. The speaker system features a power-handling capability of 100 watts and it presents a nominal impedance of 8 ohms. Its rated sensitivity is 89.8 dB, 1 watt, 1 meter.

With over 300 speaker manufacturers in the U.S. alone (we're not including imports that are available here), Baltek Audio has a tough competitive challenge ahead of them. Their plan is to highlight the value of their speakers, which they can achieve because of the lower labor costs in Latvia.

Considering their relatively low list price, the Baltic 30 is, indeed, a value. The sound it delivers belies not only the system's cost, but its size as well. Although the bass response was a bit lacking—and that was most obvious only when the Baltic 30 was compared to a system that provides truly excellent bass reproduction—the midrange and treble response was balanced and well proportioned. When listening to Wagner's "Ride of the Valkyries," for example, the opening strings and horns were lively and well defined. But Copland's "Fanfare for the Common Man" lost some of the drama that we expected from the kettledrums. We even tried placing the speakers near a wall—after all, the Baltic 30 is a bookshelf speaker. That did, of course increase the bass response—as it would with any other speaker, even one without a rear-facing port. But the resulting bass was smeared and dull, not the clean, emphatic bass that is a joy to listen to.

Based on our experience with the classical music we mentioned, we were a little apprehensive about listening to some high powered rock-and-roll. But we were pleasantly surprised. Although the speakers wouldn't be our first choice for loud, raucous music in a large room, they didn't cause the listener that kind of stress that often accompanies poorly designed speaker systems.

The Baltic 30's did not sound to us like a pair of $1000 speaker systems. But they sure didn't sound like a pair of cheap speakers either. What pleases us most is that these promising speakers are Radio Tehnika's first entry into the West. Considering the promising start that the Baltic 30 represents, we look forward to seeing what follows in this new world order. ■

CIRCLE 54 ON FREE INFORMATION CARD

Stop Gettin' Those Bad Vibrations

MICROSCAN ANTI-RESONANT SYSTEMS. From: Microscan Laboratory Inc., 7761 Bell Road, Windsor, CA 95492. Price: $150.

Audiophiles are always willing to argue about the relative merits of various audio components. No components, however, cause more arguments than loudspeaker systems. Perhaps that's because speaker measurements can be so misleading—specifications tell less about loudspeakers speakers than about any other audio component.

The environment in which you listen to speakers greatly influences the sound you hear from them. The liveliest loudspeakers will sound deadly dull in an audio laboratory's anechoic chamber. And the system that sounded so magnificent when auditioned in the showroom can have its sound vastly colored when it's placed in your listening room. In practice, think of your listening room as part of the speaker system. (That's one reason why serious listeners should shop at establishments that have a liberal exchange policy.)

There is one speaker characteristic about which virtually all audiophiles will agree. When shopping for a new speaker system, they'll say, give the cabinet a good rap. If the sound it produces is anything other than a dull thud, move on to another system. That's not because the speakers are "furniture" and should therefore be built as solidly as any table or sofa you would buy. There are other sound reasons.

For proper performance, a speaker enclosure must be as rigid as possible. A poorly constructed box with vibrating walls will absorb sonic power that would otherwise be transmitted as sound. But the rigid, braced enclosures that are characteristic of quality loudspeakers have their own problems. Because they are so rigid, they can transmit, rather than absorb, sound energy when they vibrate. The panel-radiated sound waves interfere with the direct sound generated from the speaker cone. In some cases, the panels can transmit as much acoustic energy as the drivers themselves!

If the panel vibrations were synchronized with the movement of the speaker diaphragm, the only audible problem would be poor imaging. But the panels and cone are not synchronized. The speaker cone responds almost instantly to the input signal it receives. The panels, in turn, respond to the energy produced by the cone. It takes time—perhaps a few thousandths of a second—for the energy to travel from the cone to the panels. It's the delay that causes the problem—some of the sound radiated from the panels will be out of phase with that from the diaphragm.

Those phase errors are perceived as a smearing of clarity, which is bad enough. Even worse, phase errors can change the speaker's perceived frequency response. When the panel-radiated signals are in phase with the driver-radiated energy, the perceived acoustical output increases.

Just like these Fully Trained Electronics Professionals

"Thanks to CIE I have tripled my previous salary, and I am now in a challenging and rewarding new field where only the sky is the limit."
Daniel Wade Reynolds
Industrial Electrician
Ore-Ida Foods

"CIE was recommended to me by my boss. It was appealing since I could study at my own pace at home and during business travel."
Dan Parks
Marketing Manager/Consumer Products
Analog Devices, Inc.

"I loved the flexibility CIE offered. It was the only way I could continue both school and my demanding job."
Britt A. Hanks
Director of Engineering
Petroleum Helicopters, Inc.

"I liked the way the school was set up with laboratory assignments to enforce conceptual learning. The thing which impressed me the most about CIE's curriculum is the way they show application for all the theory that is presented."
Daniel N. Parkman
Missile Electro-Mechanical Technician
U.S. Air Force

"Completing the course gave me the ability to efficiently troubleshoot modern microprocessor based audio and video systems and enjoy a sense of job security."
Tony Reynolds
Service Manager/Technician
Threshold Audio & Video

Graduate with an Associate Degree from CIE!

CIE is the best educational value you can receive if you want to learn about electronics, and earn a good income with that knowledge. CIE's reputation as the world leader in home study electronics is based solely on the success of our graduates. And we've earned our reputation with an unconditional commitment to provide our students with the very best electronics training.

Just ask any of the 150,000-plus graduates of the Cleveland Institute of Electronics who are working in high-paying positions with aerospace, computer, medical, automotive and communications firms throughout the world. They'll tell you success didn't come easy...but it did come...thanks to their CIE training. And today, a career in electronics offers more rewards than ever before.

CIE'S COMMITTED TO BEING THE BEST...IN ONE AREA...ELECTRONICS.
CIE isn't another be-everything-to-everyone school. CIE teaches only one subject and we believe we're the best at what we do. Also, CIE is accredited by the National Home Study Council. And with more than 1,000 graduates each year, we're the largest home study school specializing exclusively in electronics. CIE has been training career-minded students for nearly sixty years and we're the best at our subject...
ELECTRONICS...
IT'S THE ONLY SUBJECT WE TEACH!

CIE PROVIDES A LEARNING METHOD SO GOOD IT'S PATENTED.
CIE's AUTO-PROGRAMMED® lessons are a proven learning method for building valuable electronics career skills. Each lesson is designed to take you step-by-step and principle-by-principle. And while all of CIE's lessons are designed for independent study, CIE's instructors are personally available to assist you with just a toll free call. The result is practical training... the kind of experience you can put to work in today's marketplace.

LEARN BY DOING...WITH STATE-OF-THE-ART EQUIPMENT AND TRAINING.
CIE pioneered the first Electronics Laboratory Course and the first Microprocessor Course. Today, no other home study school can match CIE's state-of-the-art equipment and training. And all your laboratory equipment, books and lessons are included in your tuition. It's all yours to use while you study and for on-the-job after you graduate.

PERSONALIZED TRAINING....TO MATCH YOUR BACKGROUND.
While some of our students have a working knowledge of electronics others are just starting out. That's why CIE has developed twelve career courses and an A.A.S. Degree program to choose from. So, even if you're not sure which electronics career is best for you, CIE can get you started with core lessons applicable to all areas in electronics. And every CIE Course earns credit towards the completion of your Associate in Applied Science Degree. So you can work toward your degree in stages or as fast as you wish. In fact, CIE is the only school that actually rewards you for fast study, which can save you money.

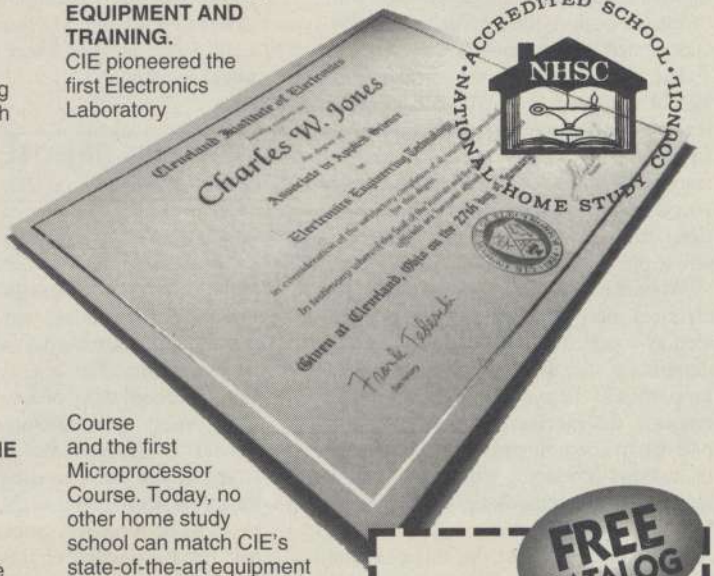

Send for CIE's FREE Course Catalog and See How We Can Help Your Career Too!

FREE CATALOG

YES! I want to get started. Send me my CIE course catalog including details about the Associate Degree Program. (For your convenience, CIE will have a representative contact you - there is no obligation.)

Please Print Clearly AH44

Name _____

Address _____

City _____

State ____ Zip _____ Age ____

Phone No. _____

Check box for G.I. Bill Benefits.
☐ Veteran
☐ Active Duty

Cleveland Institute of Electronics, Inc.
1776 East 17th Street
Cleveland, OH 44114

A School of Thousands. A Class of One. Since 1934.

When the signals are out of phase, the perceived output decreases.

Is there anything that can be done other than to line the inside of the cabinet with sound-absorptive material? *Microscan Laboratory* has another solution that almost anyone can use—its *Series D Anti-Resonant System*.

The system is a series of thin, rectangular damping plates that attach to the rear panel of a loudspeaker with a self-adhesive magnetic pad. A peel-and-stick magnet is attached to the speaker; a mating magnet then holds the Microscan System firmly in place. The coupling is surprisingly strong. It is, however, possible to remove the Microscan System by sliding it from the speaker so that A/B comparisons can be performed.

Three models of the Microscan System are available. The D-8 measures 8×9 inches and is designed for medium to large speakers. The D-6 measures 6×8 inches, for smaller speakers under 8 inches wide. (We tried both models.) The model SW-1 is designed for subwoofers.

The plate closest to the speaker has a slab of visco-elastic polymer material fastened to it. Four other plates have metal strips attached, which serve to tune their resonant frequencies. The Microscan system is designed to effectively damp vibrations from 20 to 1500 hertz, the range where phase errors are most troublesome.

When the loudspeaker is operating, mechanical energy that would have been radiated as sound instead propagates into the damping plates. Because of the molecular properties of the system, according to Microscan, the mechanical energy is dissipated in the damping plates as heat instead of as sound-producing vibrations. (No, the temperature increase is not easily detectable).

Well, that's at least the theory behind the Microscan System. Does it work?

For our first test, we attached one Microscan System to a metal file cabinet—certainly not a recommended application! Its effects were dramatic. Instead of a hollow, booming sound when the side of the cabinet was struck, only a dull thud was heard—just what a speaker cabinet is supposed to sound like.

We then tried the Microscan System on a variety of speakers, from cheap systems to which we would prefer not to listen, to quality systems priced at just under $1000 per pair. The results were, in all cases, not dramatic. In A/B tests, we were unable to reliably identify the effects of the Microscan System. But longer-term listening told another story.

On full-sized speaker systems, we noted smoother bass. Perhaps that is an indication that the Microscan System was effective in getting rid of frequency-response anomalies caused by phasing errors. Even our cheap acoustic-suspension speakers began to sound respectable. (They, in fact had the largest improvement. But considering their relatively flimsy cabinets, we weren't surprised.)

On smaller systems, our ears were not sensitive enough to hear any benefit of the Microscan System. We presume that part of the reason is that it's easy to make small boxes very strong; it's much more difficult to give a large box structural strength.

From what we can see (or hear), the Microscan System can provide benefit. But that benefit decreases with smaller speaker cabinets. The system also provides more benefit on cheap speakers than quality units. (But we wouldn't recommend scrimping on speakers with the intent of making them better by adding the Microscan System.) The benefit provided isn't earth-shattering. But we expect that audiophiles who are willing to do almost anything for even subtle sonic improvements will enjoy equipping their speaker systems with the Microscan Anti-Resonant System—and then enjoy arguing about its benefits. ■

VCRPRO 4 REMOTE

(Continued from page 11)

which the FF key advances the cursor, the REW key backtracks and erases any errors, and the PLAY key scrolls through LCD "pages." The channel and volume up and down buttons are used to set the channel, date, and time. The first screen asks if you want to record daily or weekly; for single-time events, you can press the volume down ("no") key. If you press volume up ("yes"), you can then use the FF and REW keys to select each day that you want the event to be recorded. Subsequent screens ask for the record channel, start time, length of program, date, and month. Once you're done, you must set the VCRPRO 4 facing the VCR, so that it can turn it on and off at the appropriate times.

The VCRPRO 4 can be programmed to record up to 21 different events. You can review the programming on screen, scrolling through each event. If you discover you've made a mistake, the MUTE key can clear that entry.

If, by some chance, your setup doesn't go as smoothly as ours did, Universal provides a 24-hour, toll-free hotline to help you out. You might want to call even if you don't encounter any problems, to find out more about what Universal calls "Key Magic." Intended to deal with a common universal-remote problem—the inability to duplicate such advanced functions as picture-in-picture or last-channel recall—Key Magic enables your VCRPRO 4 to access those functions. While you have their customer-service tech on the line, you should also inquire about "Key Sequence," VCRPRO 4's version of macros, which allows you to execute a series of commands with just one key stroke. And, according to Universal, if you should buy a new TV five years down the road, you can call the hotline to learn what code to use for it, doing away with built-in obsolescence.

We might not be the best ones to judge, since we haven't experienced trouble programming a VCR in the past decade, but VCRPRO 4 seems to provide an easy solution to the "How do I program my VCR?" dilemma. And while it might not provide a definitive answer to the "Where did you put the remote?" question, it does force you to leave it facing the VCR to activate recording. That makes it easy to get into the habit of leaving the VCRPRO 4 out in plain sight on the coffee table. ■

SHARP VIEWCAM

(Continued from page 7)

age stabilization; fully automatic or manual control of focus, white balance, and shutter speed; a flying erase head; and date/time stamp. Other than strobe and still shots, there are no special effects provided—which is probably a good thing. The resolution, at about 370 lines, isn't quite up to the 400 lines that's average for Hi8 camcorders. Keep in mind, however, that the ViewCam offers something that you can't find on any other camcorder, regardless of price—the LCD monitor that makes it so much fun to use, and allows it to be used in so many ways.

Even people who consider themselves to be severely camcorder-challenged—who are technophobic, have tiny hands, wear glasses to see clearly, are too short to see over common obstacles, and/or prefer to be in the action than recording it—found themselves enjoying the ViewCam. In full-auto mode, you can just point and shoot. Two-handed use is comfortable for anyone. It's easy to find a position that feels right—at waist- or chest-level, or boosted up high to see over everyone's heads. You never feel totally cut off from the action because the ViewCam doesn't have to come between you and your subjects—or you and your eyeglasses. The ViewCam's unobtrusiveness has the added bonus of making camera-shy subjects feel less uncomfortable. You can dance the night away and catch it on tape by flipping the screen around and using the remote control. You can cry your eyes out at a wedding without getting the camcorder wet. You can get the instant gratification of viewing your footage as soon as it's taped, and the added value of using the ViewCam as a personal VCR when you're not taping anything. ■

Take this GIANT CIRCUIT LIBRARY for only $9.95

when you join the *Electronics Engineers' Book Club*®

THE ENCYCLOPEDIA OF ELECTRONIC CIRCUITS —Vols. 1, 2 & 3 by Rudolf F. Graf

Hundreds of circuit ideas alphabetically arranged — from Alarm circuits to Zero crossing detector circuits!

". . . includes schematics for the latest electronics circuits from industry leaders. . ."
—Popular Electronics

Turn to this comprehensive circuit library for hundreds of project ideas . . . valuable troubleshooting and repair tips . . . and concise pinout diagrams and schematics. In each volume you'll find more than 700 electronic and integrated circuits and 100+ circuit categories right at your fingertips to give you ideas you can use on the job or at your workbench.

2,344 total pages 3,490 total illustrations **Book No. 5489C Hardcover**

If coupon is missing, write to: Electronics Engineers' Book Club, Blue Ridge Summit, PA 17294-0860

As a member of the Electronics Engineers' Book Club . . .

. . . you'll enjoy receiving Club bulletins every 3-4 weeks containing exciting offers on the latest books in the field at savings of up to 50% off of regular publishers' prices. If you want the Main Selection do nothing and it will be shipped automatically. If you want another book, or no book at all, simply return the reply form to us by the date specified. You'll have at least 10 days to decide. And you'll be eligible for *FREE BOOKS* through the Bonus Book Plan. Your only obligation is to purchase 3 more books during the next 2 years, after which you may cancel your membership at any time.

Publisher's price shown. ©1993 EEBC

ELECTRONICS ENGINEERS' BOOK CLUB

Blue Ridge Summit, PA 17294-0860

YES! Please send me *The Encyclopedia of Electronic Circuits—Vols. 1, 2 & 3* (5489C), billing me $9.95 plus shipping/handling & tax. Enroll me as a member of the **Electronics Engineers' Book Club** according to the terms outlined in this ad. If not satisfied, I may return the book within 10 days and have my membership cancelled.

Name _____

Address _____

City _____

State _____

Zip _____ Phone _____

Valid for new members only, subject to acceptance by EEBC. Canada *must* remit in U.S. funds drawn on U.S. banks. Applicants outside the U.S. and Canada will receive special ordering instructions. A shipping/handling charge & sales tax will be added to all orders. PPIF993

ELECTRONICS WISH LIST

For more information on any product in this section, circle the appropriate number on the Free Information Card.

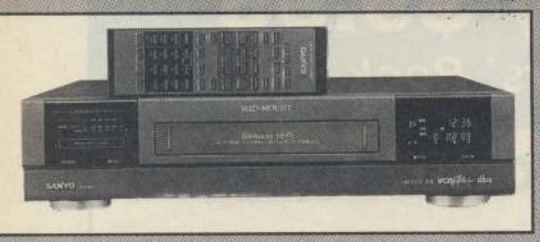

Sanyo VCR

VCR Plus VCR Plus +

Responding to consumer demand for simplified programming, *Sanyo* (21350 Lassen Street, Chatsworth, CA 91311-2329) included VCR Plus + in its top-of-the-line *VHR-9411* videocassette recorder. To program with VCR Plus + , users simply punch in the numeric "PlusCode" that is printed in local newspapers and *TV Guide*, and the date, channel, start and stop times are set automatically. VCR Plus + also can control cable boxes; a wired infrared emitter ensures that your cable box sees the signal. The tape well is mounted in the center of the deck to reduce jitter for better picture quality during viewing, editing, and dubbing. The four-head VHR9411 also features hi-fi MTS/dbx-stereo sound, front-panel A/V inputs, tri-lingual programming (English, French, or Spanish), index search, and automatic head cleaning. Price: $449.99.

CIRCLE 55 ON FREE INFORMATION CARD

Quasar TV/VCR

Video Viewers in Black and White

To make its line of combination TV/VCR units more appealing for use in any room of the home, Quasar (1707 N. Randall Road, Elgin, IL 60123-7847) is offering white or black finishes on its 13- and 20-inch color models. With no wires to connect, the sets can easily be moved from room to room, and one remote control operates both the television and the VCR. The top-of-the-line *Model SXV1420* combines a 20-inch television with a four-head VCR. Its Dyna Dome sound system provides stereo sound fired forward through slim speaker grilles on the front of the set. Other features include on-screen timer programming, on-screen menus to adjust video parameters, and high-speed search. Price: $899.

CIRCLE 56 ON FREE INFORMATION CARD

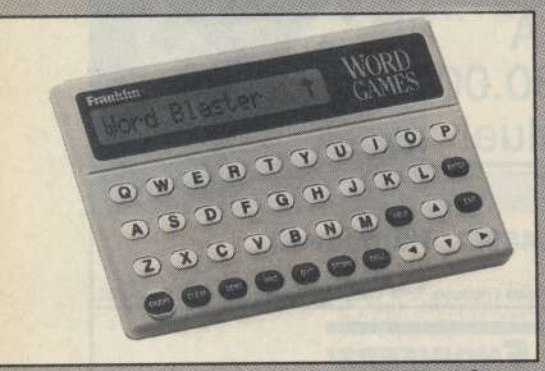

Franklin Word Games

Play on Words

You can improve your spelling, memory, and vocabulary—or just pass the time—playing the word games featured in *Franklin Electronic Publishers'* (122 Burrs Road, Mt. Holly, NJ 08060) *Word Games*. The pocket-sized unit offers ten challenging word games, including Hangman, Word Train, Anagrams, Jumble, Word Blaster, and Spelling Bee. Hints and help messages make the games easy to learn, and a score key lets you keep track of your scores. Selectable levels of skill and speed make Word Games equally suitable to keeping the kids quiet on long car trips, or keeping adult boredom at bay on long plane flights. Price: $29.95.

CIRCLE 57 ON FREE INFORMATION CARD

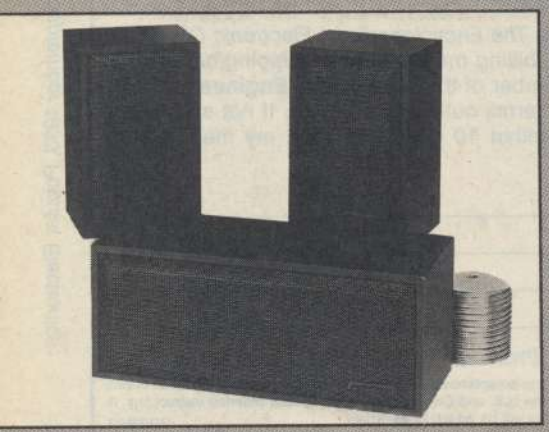

AudioSource Speaker System

Speaker Trio

Specifically engineered for Dolby Pro Logic Surround systems, the *VS 1.1 Speaker System* from *AudioSource* (1327 North Carolan Avenue, Burlingame, CA 94010) consists of a dedicated center-channel speaker (*VS One*) and a pair of surround-channel loudspeakers (*LS Ten/B*). The system is intended to be used with a home-theater that's already equipped with a Pro Logic A/V receiver and a two-speaker system. The VS One features dual four-inch woofers flanking an extended-range one-inch dome tweeter. Its enclosure is fully shielded to eliminate magnetic-field interference on picture quality even when the speaker is placed directly atop the video monitor or TV. The compact LS Ten/B loudspeakers feature mounting hooks that make it easy to place them on the walls. Each features a single four-inch woofer and a one-inch dome tweeter. Price: $195.95.

CIRCLE 58 ON FREE INFORMATION CARD

For more information on any product in this section, circle the appropriate number on the Free Information Card.

ELECTRONICS WISH LIST

Turning Back Time

For those who are not willing to relegate their LP collections to the attic, basement, or garage sale, *Rotel* (P.O. Box 653, Buffalo, NY 14240) offers the *RP900* turntable. The turntable is specially tuned for the elimination of both acoustic feedback and environmental disturbances. Its belt-drive mechanism provides two speeds in its standard configuration: 33 and 45 RPM. For collectors of 78's, an optional 78-RPM pulley is available. The tone arm, which can be used with both moving-coil and moving-magnet phonograph cartridges, includes an oil-damped cuing mechanism. Price: $499.90.

CIRCLE 59 ON FREE INFORMATION CARD

Rotel Turntable

VOX Keyboard

Your voice becomes a powerful instrument when it's used to interact with the *VA-10 Voice Arranger* keyboard from *Casio* (570 Mt. Pleasant Avenue, P.O. Box 7000, Dover, NJ 07801). When you speak into the headset microphone included with the unit, you gain access to such features as the "Harmonizer," which turns your voice into a three-part harmony; the "Vocoder," which lets you trigger keyboard notes and alter their tone by speaking different syllables; and the "Pitch Sensor," with which you can trigger keyboard tones by singing actual notes. Those features work in conjunction with a digital effects process that offers reverb, delay, chorus, distortion, and more than 50 additional effects. The Voice Arranger has a 32-note, mid-sized keyboard with 100 sounds and 12 auto rhythms. Ten user-programmable locations are available for storing custom digital effects, and a real-time memory can store 1300 notes. The "Harmony Arranger" will automatically figure out a complete accompaniment for any single-note melody that you play. Price: $199.

CIRCLE 60 ON FREE INFORMATION CARD

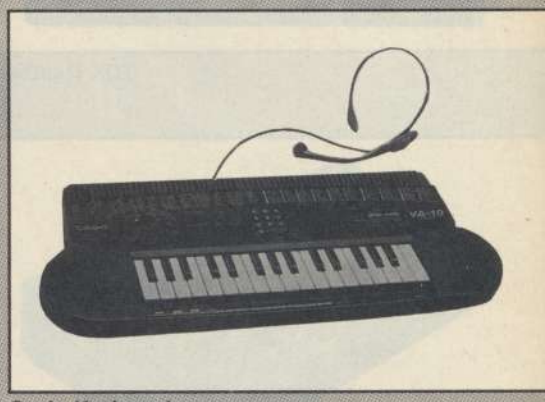

Casio Keyboard

Dick Tracy's Accountant's Watch

Flip-top watches are no longer relegated strictly to comic-book cops and secret agents. Hidden behind the traditional analog-watch facade of *Casio Inc.'s* (570 Mt. Pleasant Avenue, P.O. Box 7000, Dover, NJ 07801) *FTP-10* is an 8-digit calculator that could be used by any accountant or student. The watch face flips open to reveal the calculator, which features percent and memory functions. Price: $49.95.

CIRCLE 61 ON FREE INFORMATION CARD

Family-Focused Transceivers

The *Realistic PRS-100* two-channel handheld transceivers from *Radio Shack* (700 One Tandy Center, Fort Worth, TX 76102) provide a convenient way for family members to stay in touch on such outings as hiking, camping, or ski trips. The lightweight, portable two-way radio is manufactured to commercial-grade standards. Depending on terrain, the transceiver provides clear transmission and reception for up to several miles. Users can choose the clearest of two channels. It operates on the General Mobile Radio Service Band, which is available for limited-range non-business communications; a valid GMRS license is required. (All family members residing at the same address can use the radio under the license.) Each radio comes with a rechargeable 8-hour battery, a battery charger, a detachable antenna, a belt clip, and 462.7125- and 462.6375-MHz crystals. Price: $249.95.

CIRCLE 62 ON FREE INFORMATION CARD

Radio Shack Transceivers

ELECTRONICS WISH LIST

For more information on any product in this section, circle the appropriate number on the Free Information Card.

TDK MiniDisc

CD-Length (and -Priced) MiniDisc

Adding 14 more minutes of recording time than previous recordable MiniDiscs, *TDK's MD-XG 74-minute MiniDisc* allows users to record a complete compact disc onto each MiniDisc. A new magneto-optical recording layer was developed to achieve the higher data density necessary for extended-length recording. Compatible with all MiniDisc recorder/players, the 74-minute MD-XG features high-precision housing, outstanding heat- and shock-resistance, and a see-through protective caddy. Price: $17.49.

CIRCLE 63 ON FREE INFORMATION CARD

Disc(k) Organizers

If your family room is overrun by unruly stacks of compact discs, and your computer desk is strewn with floppy disks, you're a prime candidate for the *CD Organizer* and the *Compu-Organizer* from *Circuit Network, Inc.* (5428 N.W. 10th Terrace, Ft. Lauderdale, FL 33309). The water- and stain-resistant, book-sized 3-ring binders are intended for the storage, organization, and protection of CD's and 3½ or 5¼-inch diskettes. Static-free plastic pockets keep dust and oils off discs, and the specially-formulated plastic pages keep the sleeves from sticking together. Each organizer includes an index page for cataloging, and Velcro locking clasps. The vinyl padded binders, which are available in six colors, are designed to withstand excessive heat and cold. Each holds 24 CD's or computer disks. Suggested list price: $29.95.

CIRCLE 64 ON FREE INFORMATION CARD

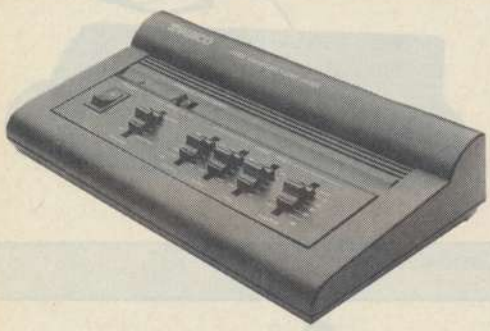

Ambico Audio Mixer/Video Enhancer

Audio Mixer/Video Enhancer

To provide amateur videographers with an expanded number of editing options for their home videos, *Ambico* (50 Maple Street, Norwood, NJ 07648-0427) offers the *Model V-6310 Audio Mixer and Video Enhancer*. The unit allows the user to add music as well as narration, using the provided microphone, for creating a high-quality soundtrack. A built-in enhancer allows the user to boost the video signal as they dub from one tape to another. The split-screen feature allows for comparison between the enhanced image and the original. Price: $79.95.

CIRCLE 65 ON FREE INFORMATION CARD

Voice-Scrambling Phone

Voice-Scrambling Cordless Phone

The *DUoFone ET-499 Cordless Phone* from *Radio Shack* (700 One Tandy Center, Fort Worth, TX 76102) has several security features. The user's voice is scrambled between the handset and the base, which prevents easy eavesdropping by outside parties equipped with scanners (or even baby monitors!).Its Automatic Access-Protection Code system changes each time the handset is returned to the cradle, to prevent other cordless phones from accessing the same line. (There are 640,000 combinations.) Radio Shack's Com-Lok feature guarantees that no other phone user can use the unit's phone line when the handset is in the cradle. In addition, the phone features advanced "Super CCT" circuitry to reduce background noise, and a 10-channel selector for improved range and reception. The ET-499 has a paging system, a 30-number memory, privacy and flash buttons, one-touch redial, and volume controls for the handset, ringer, and paging system. Price: $159.95.

CIRCLE 66 ON FREE INFORMATION CARD

Countersurveillance

Never before has so much professional information on the art of detecting and eliminating electronic snooping devices—and how to defend against experienced information thieves—been placed in one VHS video. If you are a Fortune 500 CEO, an executive in any hi-tech industry, or a novice seeking entry into an honorable, rewarding field of work in countersurveillance, you must view this video presentation again and again.

CALL NOW!

1-516-293-3751

HAVE YOUR VISA or MC CARD AVAILABLE

Wake up! You may be the victim of stolen words—precious ideas that would have made you very wealthy! Yes, professionals, even rank amateurs, may be listening to your most private conversations.

Wake up! If you are not the victim, then you are surrounded by countless victims who need your help if you know how to discover telephone taps, locate bugs, or "sweep" a room clean.

There is a thriving professional service steeped in high-tech techniques that you can become a part of! But first, you must know and understand Countersurveilance Technology. Your very first insight into this highly rewarding field is made possible by a video VHS presentation that you cannot view on broadcast television, satellite, or cable. It presents an informative program prepared by professionals in the field who know their industry, its techniques, kinks and loopholes. Men who can tell you more in 45 minutes in a straightforward, exclusive talk than was ever attempted before.

Foiling Information Thieves

Discover the targets professional snoopers seek out! The prey are stock brokers, arbitrage firms, manufacturers, high-tech companies, any competitive industry, or even small businnesses in the same community. The valuable information they filch may be marketing strategies, customer lists, product formulas, manufacturing techniques, even advertising plans. Information thieves eavesdrop on court decisions, bidding information, financial data. The list is unlimited in the mind of man—especially if he is a thief!

You know that the Russians secretly installed countless microphones in the concrete work of the American Embassy building in Moscow. They converted what was to be an embassy and private residence into the most sophisticated recording studio the world had ever known. The building had to be torn down in order to remove all the bugs.

Stolen Information

The open taps from where the information pours out may be from FAX's, computer communications, telephone calls, and everyday business meetings and lunchtime encounters. Businessmen need counselling on how to eliminate this information drain. Basic telephone use coupled with the user's understanding that someone may be listening or recording vital data and information greatly reduces the opportunity for others to purloin meaningful information.

CLAGGK INC. PE
P.O. Box 4099 • Farmingdale, NY 11735

Please rush my copy of the Countersurveillance Techniques Video VHS Cassette for a total cost of $53.95 each (which includes $4.00 postage and handling).

No. of Cassettes ordered _____.
Amount of payment $_____.
Sales tax (N.Y.S. only) _____.
Total enclosed _____.
Bill my ☐ VISA ☐ MasterCard
Card No. _____
Expire Date _____ / _____

Signature _____
Name _____
Address _____
City _____ State _____ ZIP _____

All payments in U.S.A. funds. Canadians add $4.00 per VHS cassette. No foreign orders.

The professional discussions seen on the TV screen in your home reveals how to detect and disable wiretaps, midget radio-frequency transmitters, and other bugs, plus when to use disinformation to confuse the unwanted listener, and the technique of voice scrambling telephone communications. In fact, do you know how to look for a bug, where to look for a bug, and what to do when you find it?

Bugs of a very small size are easy to build and they can be placed quickly in a matter of seconds, in any object or room. Today you may have used a telephone handset that was bugged. It probably contained three bugs. One was a phony bug to fool you into believing you found a bug and secured the telephone. The second bug placates the investigator when he finds the real thing! And the third bug is found only by the professional, who continued to search just in case there were more bugs.

The professional is not without his tools. Special equipment has been designed so that the professional can sweep a room so that he can detect voice-activated (VOX) and remote-activated bugs. Some of this equipment can be operated by novices, others require a trained countersurveillance professional.

The professionals viewed on your television screen reveal information on the latest technological advances like laser-beam snoopers that are installed hundreds of feet away from the room they snoop on. The professionals disclose that computers yield information too easily.

This advertisement was not written by a countersurveillance professional, but by a beginner whose only experience came from viewing the video tape in the privacy of his home. After you review the video carefully and understand its contents, you have taken the first important step in either acquiring professional help with your surveillance problems, or you may very well consider a career as a countersurveillance professional.

The Dollars You Save

To obtain the information contained in the video VHS cassette, you would attend a professional seminar costing $350-750 and possibly pay hundreds of dollars more if you had to travel to a distant city to attend. Now, for only $49.95 (plus $4.00 P&H) you can view ***Countersurveillance Techniques*** at home and take refresher views often. To obtain your copy, complete the coupon or call.

A Hands-on Electronics REPORT

WAVETEK AC30A CLAMP METER

CIRCLE 19 ON FREE INFORMATION CARD

Some specialized test equipment can actually be pretty versatile.

Here at **Popular Electronics**, we're always getting a lot of new multimeters to play with. The trend we've seen in recent years is for manufacturers to pack their meters with as many features as possible in order to make them extremely versatile.

However, a feature-laden multimeter is not always the meter of choice for professionals. Professionals will tend to use more specialized meters that don't have a lot of buttons and switches to slow things down and increase the chances of using the meter on the wrong setting. As a matter of fact, most high-end goods, no matter what it is—stereo equipment, sports cars, watches, etc.—usually has nothing added that doesn't directly enhance performance, durability, or safety of the unit.

Getting back to multimeters, while some of them may boast an extensive list of features, some of the important ones can actually be quite limited in performance. For example, most multimeters are limited in their current-measuring capabilities to 10 amps. That's okay for DC, where most measurements will usually be less than 10 amps anyway. However, in AC circuits, where 10 amps can easily be exceeded, that low a maximum can be a significant limitation.

If measuring AC voltage and current is a regular part of your job, then that's reason enough to look at a Wavetek AC30A clamp meter for your tool box (Wavetek, Instrumentation Products Division, 3883 Ruffin Road, San Diego, CA 92123-1898. 619-495-3200). The 3½-digit unit can measure up to 400 amps AC, 600 volts AC, resistance to 2000 ohms, and has no DC capabilities, making it the perfect tool for electricians and maintenance men who work almost exclusively with AC. The $110 meter is also pocket-sized and weighs about 6.4 ounces, making it easy to carry around. The included leather carrying case with a belt loop makes it even easier to use. Because the AC30A isn't swollen with features, it's sufficiently easy and small enough to operate with one hand. The meter is powered by two 1.5-volt button batteries, which also helps keep size and weight to a minimum.

The main difference between the AC30A and most other meters is that it's a *clamp* meter. To measure current with a non-clamp meter, the unit must be placed in series with the circuit and the current has to pass through it to be measured. The clamp meter eliminates that by measuring current inductively via a jaw that clamps around cables up to one inch in diameter. The wire's insulation remains intact and between the meter (and therefore you) and the wire for safety's sake. Also, the fact that the AC30A never directly experiences the full current it monitors allows it to measure high current levels. The high currents in question make the safety the clamp provides even more important.

The one catch to a clamp meter is that only a single conductor can be placed in the jaws for current to be measured; you can't simply clamp the meter onto an appliance's line cord and expect to get a reading, because the effect of the current passing through one lead is canceled out by the opposite current in the other lead, so you get a reading of zero. Naturally, three or more wires placed in the jaws would also give an inaccurate reading.

Using the AC30A. To measure voltage, the AC30A comes equipped

NRI knows: The best way to learn to service today's computers is to actually build a state-of-the-art computer from the keyboard up.

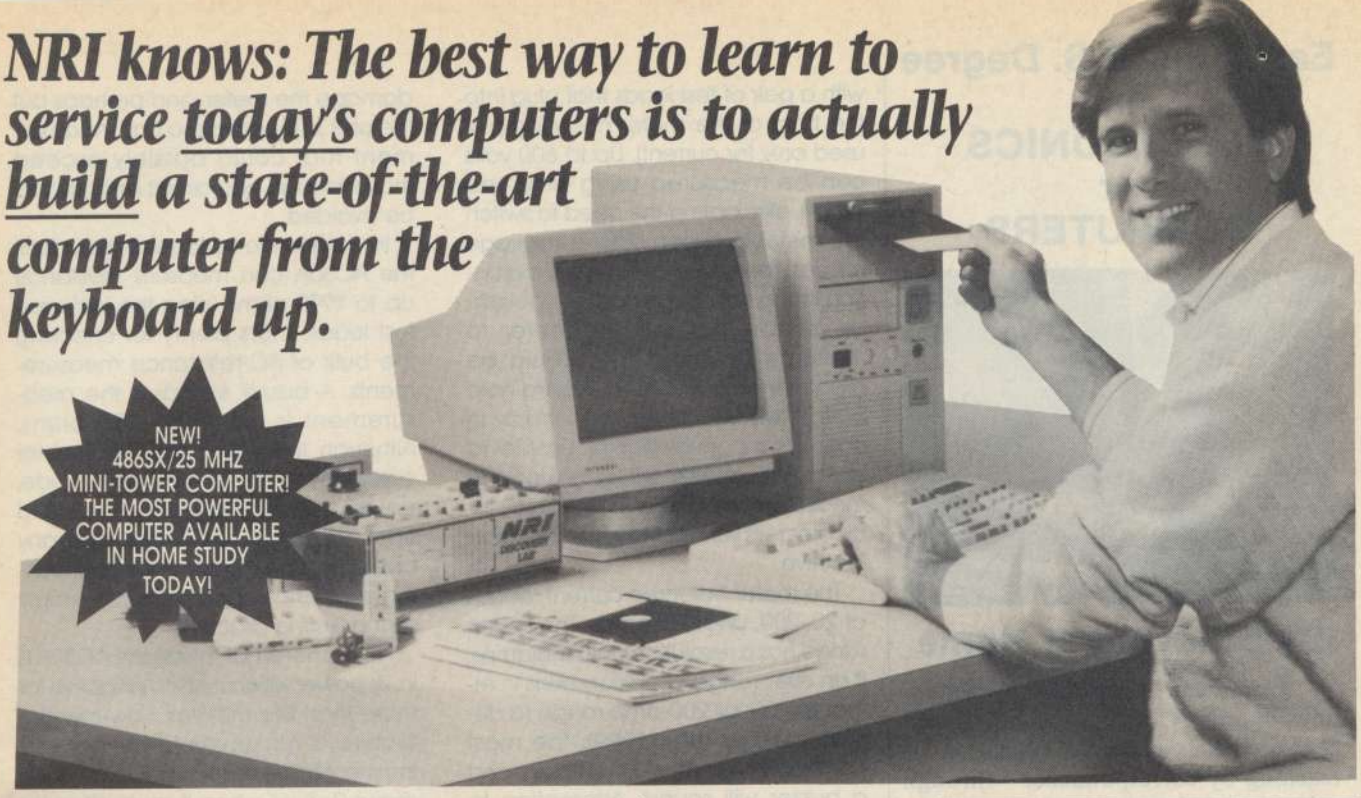

TRAIN WITH THE LEADER – NRI

Train with NRI and prepare for a high-paying position as a computer service technician, even a computer service business of your own! Regardless of your previous electronics background, you can succeed with NRI, the leader in career-building at-home electronics training for over 78 years. You begin with the basics, rapidly building on the fundamentals of electronics to master today's advanced microcomputer concepts.

LEARN BY DOING

NRI's highly acclaimed learn-by-doing approach gives you a complete understanding of the intricate electronics behind the 1 meg RAM, 32-bit CPU computer system included in your course. You perform hands-on electronics experiments with your NRI Discovery Lab and digital multimeter, then build and test the powerful 486sx/25 MHz computer you train with and keep. You install the 1.2 meg, 5-1/4" floppy disk drive, learning disk drive operation and adjustment. Later, you dramatically improve your computer's data storage capacity by installing a powerful 80 meg IDE hard drive. You even learn to diagnose and service virtually any computer problem with the extraordinary R.A.C.E.R. plug-in diagnostic card and QuickTech diagnostic software also included in your course.

STUDY AT YOUR OWN PACE

With NRI, you study in the privacy and convenience of your own home — with your personal instructor and NRI's team of technical professionals behind you every step of the way. You learn at your own pace — no classroom pressures, no night school, no need to quit your present job until you're ready to make your move! Step by step you're guided through the assembly of a powerful 486sx-based computer system — the centerpiece of your coursework — complete with monitor, floppy drive, 80 meg hard drive, operating and applications software.

You get the hands-on experience you need to troubleshoot any IBM-compatible computer, plus the confidence to tackle any service job you take on. What's more, you work with today's most popular integrated software package, Microsoft Works, learning to use its word processing, spreadsheet, database, and communications utilities for your own personal and professional applications.

It's a fact: Only NRI gives you such thorough, effective training in computer servicing. And no other school gives you hand-on experience with a computer more powerful than the 486sx-based system included in your course.

IBM is a registered trademark of International Business Machines Corp. R.A.C.E.R. and QuickTech are registered trademarks of Ultra-X, Inc.

MASTER YOUR FUTURE

The Department of Labor forecasts over 220,000 jobs for computer service technicians by the year 2005 — a full 38% increase over today's level. With the right training and skills, you can cash in on this wide-open opportunity and become a high-paid computer service technician. Whether you choose a full- or part-time job — or start a computer service business of your own — you'll be well prepared, continuously drawing on the real-world experience of your NRI training. Master electronics and computers the NRI way and master your future!

LEARN MORE ABOUT NRI TODAY

Send today for NRI's free, full-color catalog that describes every aspect of NRI's innovative computer training, as well as hands-on training in other growing high-tech career fields. If coupon is missing write to: NRI Schools, McGraw-Hill Continuing Education Center, 4401 Connecticut Avenue, NW, Washington, DC 20008.

SEND CARD TODAY FOR FREE NRI CATALOG

NRI Schools McGraw-Hill Continuing Education Center
4401 Connecticut Avenue, NW, Washington, DC 20008

☑ **Check one FREE catalog only**

- ☐ **MICROCOMPUTER SERVICING**
- ☐ TV/Video/Audio Servicing
- ☐ Telecommunications
- ☐ Industrial Electronics & Robotics
- ☐ Security Electronics
- ☐ Electronic Music Technology
- ☐ Basic Electronics
- ☐ Computer Programming
- ☐ Programming in C++ with Windows
- ☐ Desktop Publishing & Design
- ☐ Word Processing Home Business
- ☐ Bookkeeping & Accounting
- ☐ Home Inspection
- ☐ Building Construction
- ☐ Small Engine Repair
- ☐ Automotive Servicing

☐ For career courses approved under GI Bill, check for details.

Name (please print) Age

Address

City/State/Zip Accredited Member, National Home Study Council 0018-0993

Earn Your B.S. Degree in ELECTRONICS or COMPUTERS

By Studying at Home

Grantham College of Engineering, now in our 43rd year, is highly experienced in "distance education"—teaching by correspondence—through printed materials, computer materials, fax, and phone.

No commuting to class. Study at your own pace, while continuing on your present job. Learn from easy-to-understand but complete and thorough lesson materials, with additional help from our instructors.

Our Computer B.S. Degree Program includes courses in BASIC, PASCAL and C languages — as well as Assembly Language, MS DOS, CADD, Robotics, and much more.

Our Electronics B.S. Degree Program includes courses in Solid-State Circuit Analysis and Design, Control Systems, Analog/Digital Communications, Microwave Engr, and much more.

An important part of being prepared to *move up* is holding the right college degree, and the absolutely necessary part is knowing your field. Grantham can help you both ways—to learn more and to earn your degree in the process.

Write or phone for our free catalog. Toll free, 1-800-955-2527, or see mailing address below.

•

Accredited by the Accrediting Commission of the National Home Study Council

•

GRANTHAM College of Engineering

Grantham College Road
Slidell, LA 70460

with a pair of test leads that plug into the front of the meter (the clamp is used only for current). Up to 600 volts can be measured using only one range, eliminating the need to switch the meter between different voltage ranges. There is no over-range indication in the voltage mode, so you simply should not use the meter to measure anything that could be greater than 600 volts AC. A data-hold button lets you freeze the display in case it's inconvenient or unsafe to watch the display while making the measurement, and a "DH" display indicator tells you that the hold function is active.

The meter has three current ranges of 20, 200, and 400 amps. The lowest range has a resolution of 10 milliamps. If an over-range condition exists in either the 20- or 200-amp range (a display greater than 1999), the most significant digit (the "1") will flash, and a buzzer will sound. Attempting to measure any current greater than 400 amps, or any current created by a potential of more than 600 volts is not a good idea; such a current can damage the meter, and perhaps put the user in jeopardy, so any measurement that could possibly exceed those voltage and circuit limits should be avoided.

In addition to voltage and current, the AC30A can measure resistance up to 1999 ohms using the included test leads. That's plenty for checking the bulk of AC-resistance measurements. A buzzer sounds if the measurement is less than 300 ohms. Although the meter is protected for overloads up to 350 volts in this mode, power should always be removed from the circuit under test and any capacitors discharged before checking resistance. Doing that is simply sound testing practice.

No matter what mode the AC30A is in, its power will shut off if it's inactive for more than five minutes. However, this feature is no substitute for actually turning off the meter, because it still draws 2–3 μA when it shuts off automatically.

Because the AC30A makes it so easy to check AC current, we found ourselves wanting to check anything and everything we could, mostly out of curiosity. For example, it's very easy to check the load on any given circuit breaker with every appliance turned on. That way you can eliminate the chance of overloading your home's AC wiring.

The meter also makes it easy to check the current draw of any individual appliance. We did that by separating the leads on an extension cord and clamping the meter around one of them. We found that a 40-watt bulb draws—as you might expect—about a third of an amp (from $P = IV$, $40 = \frac{1}{3} \times 120$). We also determined that an unmarked bulb sitting in a drawer was a 60-watt unit, and safe for the lamp we wanted to use it in. Of course, the setup isn't limited to light bulbs—we now can quickly check the current draw of the projects we've built from **Popular Electronics**.

We feel that the Wavetek AC30A Clamp Meter is certainly a handy instrument to have around, even for non-professionals. If you feel its useful enough to find out more about it, you can contact Wavetek directly at the address given earlier in this article, or circle No. 119 on the Free Information card that can be found elsewhere in this issue. ■

FREE CATALOG TEST INSTRUMENTS & HARD-TO-FIND TOOLS

Packed with over 10,000 quality products for testing, repairing, and assembling electronic equipment. A full selection of test instruments, power protection equipment, precision hand tools, tool kits, soldering supplies, and much more. Products are shown in full color with detailed descriptions and pricing. All products come with a 100% satisfaction guarantee. SAME-DAY shipment program.

In a hurry to receive your catalog?

Call **(800) 225-5370**
In Massachusetts call (508) 682-2000

Contact East, Inc., Dept. R522
335 Willow St., No. Andover, MA 01845

CIRCLE 9 ON FREE INFORMATION CARD

PRODUCT TEST REPORTS

By Len Feldman

Minolta 8-848 Hi-8 Video Camcorder

Minolta has managed to cram more features into this compact, lightweight, Hi-8 video camcorder than we would have thought possible. To begin with, if you are unfamiliar with the term Hi-8, you should know that this format provides picture clarity that is far better than that of ordinary 8 mm camcorders. In fact, the picture resolution exceeds that normally provided by broadcast or cable TV programming. But that's only the beginning of the story.

CIRCLE 120 ON FREE INFORMATION CARD

The Minolta 8-848 Hi-8 Video Camcorder.

The Minolta 8-848 features a switchable electronic image stabilizer (EIS) that keeps the picture steady even as you walk or ride in a car. No more up-and-down picture bouncing that can be so annoying to viewers of your video "home movies." In addition to the optical 8× zoom, there's a digital zoom feature that provides 16× telephoto zoom plus the ability to shoot pictures in the 16-by-9 aspect ratio that will prevail in the future. A digital filter lets you record in black-and-white, sepia, or with emphasized red for creating special effects. More traditional features, such as auto focus with macro-lens (for extreme close-ups), fade in/fade out, and automatic exposure, are, of course, included. Also included is a two-page titler and a dual time clock (for adding the date and time of a "shoot" when you travel in your own or in a foreign time zone). The Minolta 8-848 records sound in hi-fi stereo using a built-in dual-element stereo microphone; there is no provision for an external microphone. This camcorder is supplied with a wireless remote control that allows you to operate the unit from a distance. A light-shoe (for attaching an optional video light) is provided near the front of the camcorder body.

Accessories included with the camcorder package include the usual cables; an RF-output adapter; an external power adapter; a battery pack and the batteries required for the date/time feature and the wireless-remote unit; a shoulder strap; and an AC adapter/charger. An important and useful feature of the battery charger is called "refresh." Most rechargeable batteries have a so-called "memory," such that if they are repeatedly recharged before they are fully discharged, they gradually lose their ability to accept a full charge and thereby reduce the recording or playback time that they can provide. The "refresh" feature fully discharges the battery before beginning the recharge cycle, thus insuring a full charge and prolonging the useful life of the batteries.

CONTROLS

The left side of the camcorder body contains an auto/manual-focus button, a manual-focus control, a back-lighting-compensation switch, the fade-in/fade-out button, a digital-filter switch (for black-and-white, sepia, or red picture effects), the electronic image-stabilizer on/off button, and a zoom-mode button. The zoom-mode button lets the user select between digital zooms of 16:1, 64:1 (with a mosaic effect), and 64:1 with 16×9 aspect ratio.

The rear surface of the camcorder contains most of the remaining controls. An eject switch opens the cassette compartment. A three-position power switch selects between camera operation, video-playback operation, or power-off. Date, display, counter reset, review (of the last few seconds of a scene just shot) and a title-on/off button comprise the controls associated with the camera function. The video-playback controls include play, fast-forward, rewind, stop, and pause. A tiny compartment alongside these last-named controls accepts the small battery that is used by the time/date fea-

SUPER 12 HOUR RECORDER

CALL TOLL FREE

Modified Panasonic Slimline. 6 hrs per side. 120 TDK tape furnished. AC/DC Operation. Quality Playback. Digital Counter. Durable Lightweight Plastic.

$119.00*

PHONE RECORDING ADAPTER

Starts & Stops Recorder Automatically When Hand Set is Used. Solid State!

FCC APPROVED

$28.50*

VOX VOICE ACTIVATED CONTROL

Solidstate Adjustable Sensitivity. Voices & Sounds Activate Recorder. Adjustable Sensitivity. Provisions for Remote Mike.

$28.50*

*Add for ship. & handling. Phone Adapter & Vox $2.00 each, Recorders $5.00 each, Colo. Res. add tax. Mail Order, VISA, M/C, COD's OK. Money Back Guar. Qty. Disc. available. Dealer inquiries invited. Free data on other products.

ALL MAIL TO: Box 20100, Boulder, CO 80308
AMC SALES INC., 193 Vaquero Dr., Boulder, CO 80303
Phones (303) 499-5405 • 1-800-926-2488
FAX (303) 494-4924 • Mon-Fri 8-5 MTN. TIME

CIRCLE 8 ON FREE INFORMATION CARD

Be an FCC LICENSED ELECTRONIC TECHNICIAN!

No costly school. No commuting to class. The Original Home-Study course prepares you for the "FCC Commercial Radiotelephone License." This valuable license is your professional "ticket" to thousands of exciting jobs in Communications, Radio-TV, Microwave, Maritime, Radar, Avionics and more...even start your own business! You don't need a college degree to qualify, but you do need an FCC License.

No Need to Quit Your Job or Go To School
This proven course is easy, fast and low cost! GUARANTEED PASS—You get your FCC License or money refunded. **Send for FREE facts now. MAIL COUPON TODAY!**

COMMAND PRODUCTIONS
FCC LICENSE TRAINING, Dept. 100
P.O. Box 2824, San Francisco, CA 94126
Please rush FREE details immediately!

NAME _____
ADDRESS _____
CITY _____ STATE _____ ZIP _____

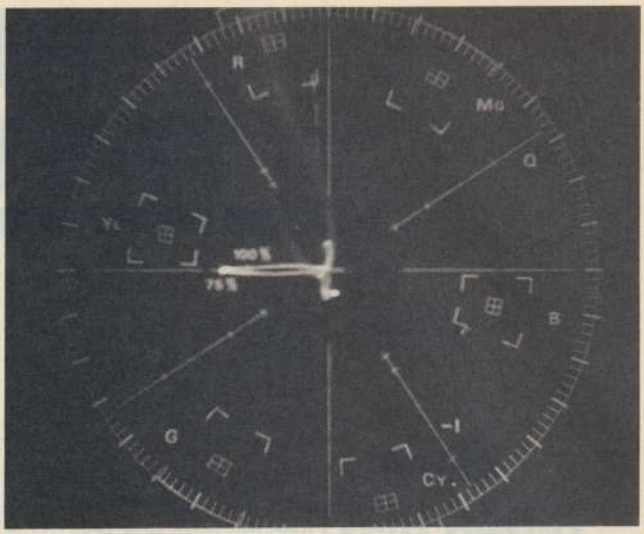

The color-signal phase accuracy and chroma saturation were measured by using a red field. The results are shown in this vectorscope photo.

ture, while just above that compartment is a miniature switch that selects Hi-8 operation or conventional 8 millimeter operation.

A pivotable electronic viewfinder is located along the right side of the camcorder body, just above the camera start/stop button that is positioned for easy thumb use when the camera is hand held. The battery pack, or the AC adapter completes the comfortable contour of the right side of the camcorder where the user's hand normally grips the unit. A rocker zoom switch is located so that it is easily engaged by the user's forefinger and middle finger.

Up front, near the lens, is the video-light shoe and a small door which, when opened, exposes the audio/video input/output connector. The stereo microphone is positioned on the front surface of the camcorder, just below the lens. The underside of the camcorder contains the usual tripod screw-thread and a tiny switch that activates circuitry that compensates for wind noise that the microphone might pick up in outdoor shooting environments. A battery-release switch and lever are also found on the underside of the camcorder body.

TEST RESULTS

As usual, the camcorder was turned over to the Advanced Product Evaluation Laboratories (APEL) for comprehensive testing. APEL's measurements revealed that the minimum illumination required for a full-amplitude video-output signal was 2.1 lux, suggesting that this camcorder will work well even under relatively poor lighting conditions. White balance was about average, with a reading of 7 IRE. However, the quartz halogen lamp that the lab normally uses to measure white balance (the amount of chrominance or color that appears on a neutral object) could not be used because the white balance tended to a red tint. Using a "cool white" fluorescent light resulted in the 7 IRE reading.

Color contamination, or the appearance of color bursts on a black and white pattern, measured an acceptably low 6 IRE. Color-

TEST RESULTS—MINOLTA 8-847 HI-8 VIDEO CAMCORDER

SPECIFICATION	PE MEASURED
VIDEO SECTION	
Minimum illumination	2.1 lux
White balance	7 IRE (See text)
Color contamination	6 IRE
Horizontal resolution	
Camera	360 lines
Record/play video output	340 lines
Record/play TV output	320 lines
Signal-to-noise ratios (opt./min. illum.)	
Camera, chroma AM	41.4/39.0 dB
Record/play video output	39.9/39.2 dB
Record/play TV output	39.8/38.6 dB
Camera, luminance	40.1/34.8 dB
Record/play video output	40.6/36.8 dB
Record/play TV output	39.1/36.4
Minimum focus distance (norm/macro)	42/-⅜ (inches)
AUDIO SECTION	
Max. microphone output	0.57 volts
ADDITIONAL DATA	
Power-zoom speed (optical)	10 seconds
Fast-forward/reverse time	8 min./8 min. 35 sec.
Power requirements	9.5 watts
Weight (w/battery and cassette)	1⅞ lbs.
Dimensions (H × W × D, inches)	4⅛ × 3⅛ × 9⅛
Suggested Price: $1722	

signal phase accuracy and chroma saturation were measured by using a red field and results were examined using a vectorscope. In general, the camcorder tended to oversaturate red color. Because of the electronic image stabilizer, there was some lag present when the camcorder was used to pan scenes quickly.

The advantage of the Hi-8 format was evident when APEL measured horizontal resolution. For the camera alone, resolution was an impressive 360 lines. Measured at the record/play video output, resolution was still 340 lines, and even through the record/play cycle resolution remained a high 320 lines, which is about as good as one can get from a properly broadcast live TV program.

The chroma AM signal-to-noise ratio, read directly from the camera output, was an impressively high 41.4 dB, while the luminance signal-to-noise ratio measured that way was a very satisfactory 40.1 dB. Going through the entire record/play cycle, the chroma AM S/N decreased to 39.8 dB, while luminance S/N decreased to 39.1 dB. The signal-to-noise ratios that were obtained with minimum illumination were, as you might expect, poorer and are shown in the Test Results table.

The built-in stereo microphone delivered a maximum output level of 0.57 volts-per-channel. The minimum focusing distance in the normal operating mode was 42 inches; while using the macro feature, it was possible to focus to within ⅜-inch.

HANDS-ON TESTS

It took us some time to familiarize ourselves with all of the features of this remarkable Hi-8 camcorder, but once we did, we could only marvel at how Minolta's engineers were able to incorporate so much into so small and compact a unit. The improvement brought about by the Hi-8 format was unmistakable. (Like APEL, we used TDK Hi-8 E6-120 tape for our hands-on experiments.) Thanks to the Hi-8 system, pictures were sharper and more detailed than those we have obtained with either conventional 8 mm camcorders or with standard VHS or VHS-C camcorders.

As audio enthusiasts, we were especially pleased with the stereo hi-fi audio capabilities of this camcorder, though we would have very much liked to be able to connect an external microphone for even more effective stereo imaging. When shooting at some distance from a subject, very little stereo effect is realized because the two elements of the stereo microphone hear essentially the same sound. Nevertheless, when subjects moved closer to the camcorder and when they were asked to walk from side to side within the camcorder's field of view, the stereo effect was unmistakable and fairly dramatic.

Certainly, at $1722 the Minolta 8-848 is not an inexpensive camcorder, and it's conceivable that some of its features may hardly ever be used by the typical video enthusiast. Still, if you want a lightweight, compact camcorder that offers long recording time (up to 2½ hours on a single tape), top quality picture resolution, and more than the usual run of features, the Minolta 8-848 is certainly a unit that is worth your consideration.

For more information on the 8-848 Hi-8 Camcorder, contact Minolta (101 Williams Dr., Ramsey, NJ 07446) directly, or circle No. 120 on the Free Information Card.

Learn VCR repair at home!

MAKE *GOOD* MONEY IN YOUR OWN FULL- OR PART-TIME JOB

Professional-level home study course. You will master easy-to-learn, high-profit repairs *without* investing in high-tech instruments or a costly workshop. Want more independence and higher income? Send or call today!

Free career literature:
800-223-4542

Name_____ Age____
Address_____ Phone (____)_____
City_____ State____ Zip_____

The School of VCR Repair
6065 Roswell Road
Dept.VK341, Atlanta, Georgia 30328

CIRCLE 11 ON FREE INFORMATION CARD

1·800·831·4242

Your Resource for Value. Only a Phone Call Away.

20 YEARS OF EXCELLENCE 1973-1993

40 Watt Switching Power Supply

+5V @ 1.5A -5V @ .32A
+5V @ .4A -12V @ .075A
+12V @ .5A +22V @ 1A

- Input: 115VAC @ 60Hz
- 2-pin Molex input connector and 4 output connectors
- Size: 5.375"L x 3.5"W x 1.25"H
- Weight: .5 lb.

Part No.	Product No.	Price
9P77972	PS512	$14.95

23 Watt Switching Power Supply

+5V @ 1.8A
+15V @ .450A
-15V @ .450A

- Input: 120VAC @ 50/60Hz
- Molex style input and output connectors
- Size: 5"L x 3"W x 1.375"H
- Weight: .5 lb.

Part No.	Product No.	Price
9P76611	PS9099	$12.95

See our Catalog for more power supplies

Metex Digital Multimeters

- Handheld high accuracy
- Measures AC/DC voltage, AC/DC current, resistance, diodes, audible continuity test, transistor hFE
- Manual ranging w/overload protection
- Comes with probes, batteries, case and manual
- One-year warranty

9P27158

9P27086 & 9P27158 only:
- Also measures frequency and capacitance

Part No.	Description	Price
9P27078	3.5 digit multimeter	$59.95
9P27086	3.5 digit multimeter w/frequency & capacitance	74.95
9P27115	3.5 digit multimeter	39.95
9P27140	4.5 digit multimeter, w/tach/dwell	59.95
9P27158	4.5 digit w/frequency & capacitance & data hold switch	99.95

Jameco Solderless Breadboards

9P20757

Our long-lasting breadboards feature screen printed color coordinates and are suitable for many kinds of prototyping and circuit design. Larger models feature heavy-duty aluminum backing with voltage and grounding posts.

Part No.	Terminal Strips	Bus Strips	Contact Points	Price 1-9
9P20343	0	2	200	$3.49
9P20600	1	2	400	4.95
9P20669	1	0	630	5.95
9P20722	1	2	830	6.95
9P20757	2	1	1,360	12.95
9P20773	2	4	1,660	17.95
9P20790	3	5	2,390	24.95
9P20811	4	7	3,220	32.95

Linear Integrated Circuits

Part No.	Product No	Price 1-9
9P33241	TL082CP	$.59
9P23579	LM317T	.65
9P23683	LM324N	.35
9P23771	LM336Z	1.09
9P23851	LM339N	.45
9P27422	NE555V	.35
9P24328	LM556N	.49
9P24467	LM723CN	.49
9P24539	LM741CN	.29
9P23131	LM1458N	.39
9P23157	LM1488N	.45
9P23181	LM1489N	.45
9P34278	ULN2003A	.69
9P24230	LM3914N	2.49
9P27385	NE5532	1.19
9P51262	7805T	.45
9P51334	7812T	.45

TTL Integrated Circuits

Part No.	Product No	Price 1-9
9P46252	74LS00	$.25
9P46287	74LS02	.25
9P46316	74LS04	.25
9P46375	74LS08	.29
9P46640	74LS14	.39
9P47458	74LS30	.25
9P47466	74LS32	.25
9P48004	74LS74	.29
9P48039	74LS76	.49
9P48098	74LS86	.25
9P46447	74LS112	.25
9P46480	74LS123	.39
9P46607	74LS138	.39
9P46957	74LS175	.35
9P47036	74LS193	.59
9P47183	74LS244	.69
9P47212	74LS245	.69
9P47600	74LS373	.69
9P47634	74LS374	.69

Diodes and Transistors

9P35991

9P38236

Part No.	Product No.	Description	Price
9P36038	1N4148	Switching diode	$.07
9P36097	1N4733	Zener diode	.25
9P35991	1N4004	Silicon rectifier	.10
9P38236	2N2222A	Gen. pur. transistor	.25
9P38279	2N2907A	Gen. pur. transistor	.25
9P38359	2N3904	Gen. pur. transistor	.12

Ceramic Capacitors (50v) ±20% Ceramic

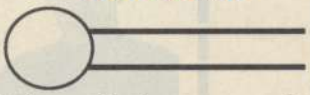

Part No.	Capacitance	Price
9P15333	10pf	$.10
9P15341	100pf	.10
9P15190	.001µF	.10
9P15229	.01µF	.10
9P15253	.047µF	.10
9P15270	.1µF	.15

Soldertail Low Profile Tin Plated IC Sockets

Lead Length: .125"
Body Height: .156"

Part No.	Pins	Price
9P51570	8 pin	$.10
9P37161	14 pin	.11
9P37372	16 pin	.12
9P39335	24 pin	.19
9P40301	28 pin	.22
9P41110	40 pin	.28

**Additional components available*

Carbon Film 1/4 Watt 5% Resistor Assortments

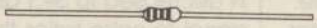

Part No.	Description	Price
9P10719	5 each 70 values (every other value from R10 ohm-R5.6 meg) 1/4 Watt C.F. Resistor Values (350 pcs.)	$9.95
9P10663	100 each (27 values) 1/4 Watt C.F. Resistors R10 thru R10M (2,700 pcs.)	39.95

LEDs

Part No.	Product No.	Description	Price
9P34796	XC556R	Red .200 dia	$.12
9P34761	XC556G	Green .200 dia	.16
9P34825	XC556Y	Yellow .200 dia	.16
9P34622	XC209R	Red .125 dia	.14
9P34606	XC209G	Green .125 dia	.18
9P34657	XC209Y	Yellow .125 dia	.18

SMT product now available!
Call for price and availability

Other Jameco Resources

- Test/Measurement and Prototyping Equipment
- Full line of Integrated Circuits and Electronic Components
- Call for hobby kits

Order toll-free 1•800•831•4242

Call or write for your **FREE Summer Component Catalog: 1•800•637•8471**

For International Sales, Customer Service, Credit Department and all other inquiries: Call 415•592•8097 between 7AM-5PM P.S.T.

CA Residents please add applicable sales tax.

$30.00 Minimum Order

JAMECO™
ELECTRONIC COMPONENTS
COMPUTER PRODUCTS

1355 Shoreway Road
Belmont, CA 94002
FAX: 1•800•237•6948 (Domestic)
FAX: 415•592•2503 (International)

Terms: Prices subject to change without notice. Items subject to availability and prior sale. Complete list of terms/warranties is available upon request.

Mention V.I.P.# 9P3

© 1993 Jameco 9/93 All trademarks are registered trademarks of their respective companies.

CIRCLE 7 ON FREE INFORMATION CARD

Build a Telephone Scrambler

Keep your privileged conversations completely private with this audio-scrambling circuit.

BY TERRY J. WEEDER

How private are your private telephone conversations? If you are like most people, you take for granted that conversations held over the telephone are strictly between you and the person on the other end. It is a very uneasy feeling to find out later that someone has been listening in.

Well worry no more, for the *Telephone Scrambler* described in this article is designed to dispose of that problem. The Telephone Scrambler, which connects between your telephone and wall jack and does not require modifications to your telephone, is designed to scramble your voice before sending it over the telephone line. Anyone picking up an extension or monitoring your conversation with a telephone-line transmitter will hear nothing more than garbled sound. Only the party at the other end of the telephone line, using another Telephone Scrambler, will be able to understand what you are saying.

Theory. There are many different ways to scramble audio signals that contain speech so as to render the speech unintelligible. The difficult part of making speech unintelligible lies in doing so in a manner that allows it to be restored to its original form. The Telephone Scrambler accomplishes that task by shifting all high frequencies to low frequencies, and all low frequencies to high frequencies.

The exact amount of frequency shift is determined by the distance in Hz that the original signal is from the center frequency of 1790 Hz. For example, the parts of your speech pattern that lie at 2290 Hz (500 Hz above the center frequency) will be shifted to 1290 Hz (500 Hz below the center frequency), and vice versa, the parts of your speech that lies, at say, 2790 Hz (1000 Hz above the center frequency) will be shifted to 790 Hz (1000 Hz below the center frequency), and vice versa. The result is a garbled audio signal sounding similar to that of listening to an SSB-modulated carrier with an AM receiver.

The process of restoring the audio to its original form can be accomplished in the same way. Simply perform the task of frequency shifting on the scrambled audio for a second time, and all the products in the speech pattern will be shifted back to their original frequency. (The process is analogous to double-inverting a signal in a digital system.)

About the Circuit. Figure 1 shows a functional block diagram of the Telephone Scrambler. The circuit is comprised of two hybrid networks, two low-pass filters, two balanced modulators, an oscillator, a divide-by-1000 counter, and two buffer stages. The circuit's operation is really quite simple. The oscillator provides a 3.58-MHz signal that is down-converted by the divider to provide a 3.58 kHz signal, which is then fed through the buffer to one of the modulators. While that's going on, speech is applied to the hybrid network, which transfers the signal to the balanced modulator, where the two signals are mixed (to produce scrambled audio), and then output to the telephone line through a low-pass filter.

A schematic diagram of the actual circuit is shown in Fig. 2. The circuit is powered from a 13-volt AC wall transformer, the output of which is converted to DC by a fullwave bridge rectifier (BR1) and regulated by a pair of Zener diodes (D1 and D2) to form a dual (±) 6.2-volt supply. Power for the relay (K1) is tapped from the output of BR1 (prior to regulation) so as not to put an unnecessary strain on the regulated 6.2-volt source.

Initially, relay K1 is de-energized, so the circuit is bypassed through K1's normally closed contacts, allowing the telephone to operate in the normal manner. A PS2505-1NEC optoisolator/coupler (U6) is used to monitor current flow through the telephone and provides base bias current for Q1 only when the telephone is

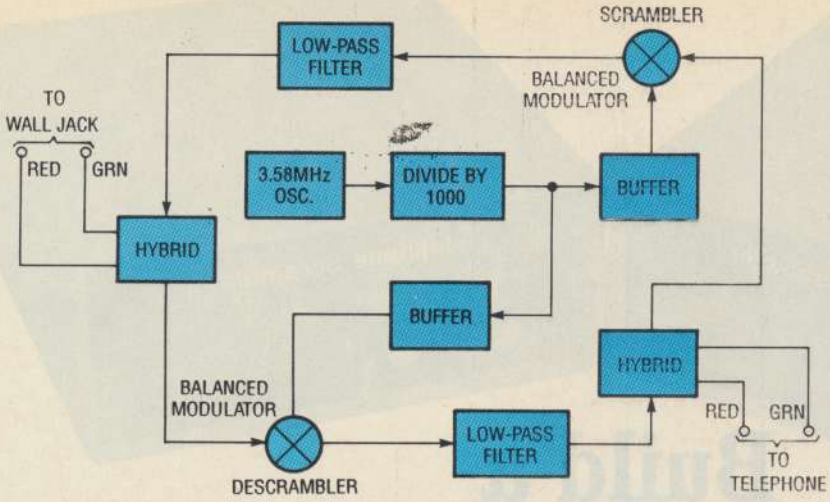

Fig. 1. The Telephone Scrambler scrambles all outgoing dialog from the telephone, while it descrambles all incoming dialog from the telephone line.

off hook. With base bias present, pressing S2 (SCRAMBLE) turns on SCR1 and current flows through Q1, current-limiting resistor R44, and the coil of relay K1, activating it. Current also flows through LED1, indicating that the circuit is in the scrambled mode.

Diode D3 is included in the circuit to protect Q1 from reverse voltage spikes, resulting from the de-energization of K1. Capacitor C15 provides temporary bias current for Q1 during the break in telephone current when the relay armature is in the process of moving between sets of contacts.

When K1 (a DPDT relay) is energized, one set of its contacts places the primary winding of transformer T1 across the telephone line, completing the current loop that alerts the central-office switching equipment to an off-hook condition, while coupling audio signals to and from the telephone line. At the same time, −6 volts is applied to the telephone through K1's second set of contacts and transformer T2's primary winding, providing operating power to the telephone (like in the normal off-hook condition), and allowing audio to be coupled to and from the telephone.

The circuit includes two hybrid networks. The first consists of the secondary winding of T1, coupled with U3-d and R22 through R24. The second hybrid network is comprised of the secondary winding of T2, coupled with U3-c and R19 through R21. Those networks allow signals from the secondary windings of the transformers to be applied to the inputs of op-amps U3-c and U3-d. The outputs of op-amps U3-a and U3-b are in turn applied to the secondary windings of

PARTS LIST FOR THE TELEPHONE SCRAMBLER

SEMICONDUCTORS

U1—4069 hex inverter, integrated circuit
U2—4040 12-stage ripple-carry binary counter/divider, integrated circuit
U3—LM348N quad op-amp, integrated circuit
U4, U5—LM1496N balanced-modulator/demodulator, integrated circuit
U6—PS2505-1NEC optoisolator/coupler, integrated circuit
SCR1—S401E-ND 1-amp, 400-PIV, non-sensitive gate, silicon controlled rectifier
Q1—2N4400 general-purpose NPN silicon transistor
BR1—1-amp, 200-PIV, fullwave-bridge rectifier
D1, D2—1N4735, 6.2-volt Zener diode
D3—1N4148 general-purpose silicon switching diode
LED1, LED2—Light-emitting diode
MOV1—130-VRMS, metal-oxide varistor

RESISTORS

(All fixed resistors are ¼-watt, 5% units.)
R1—10-megohm
R2—1200-ohm
R3, R40—4700-ohm
R4, R39—47,000-ohm
R5, R38—20,000-ohm
R6, R7, R19, R20, R23, R24, R36, R37—10,000-ohm
R8, R14, R30, R35—3900-ohm
R9, R10, R28, R29, R42—51-ohm
R11–R13, R15, R17, R18, R25–R27, R31, R32, R34—1000-ohm
R16, R33—6800-ohm
R21, R22—560-ohm
R41—130-ohm
R43, R47—220-ohm
R44—750-ohm
R45, R46—20-ohm

CAPACITORS

C1, C4, C16, C17, C20—0.1-µF, Mylar
C2, C3—36-pF, ceramic-disc
C5, C14—220-pF, ceramic-disc
C6, C13—0.02-µF, Mylar
C7, C12—0.033-µF, Mylar
C8, C11—1-µF, 16-WVDC, tantalum
C9, C10—22-µF, 16-WVDC, electrolytic
C15—2.2-µF, 16-WVDC, tantalum
C18, C19—100-µF, 35-WVDC, electrolytic
C21—1000-µF, 35-WVDC, electrolytic

ADDITIONAL PARTS AND MATERIALS

XTAL1—3.58-MHz, TV color-burst crystal
T1, T2—600-ohm to 600-ohm audio transformer
K1—12-volt DC, DPDT relay
S1, S2—SPST momentary pushbutton switch
Printed-circuit materials, enclosure, 13-volt AC, 800-mA wall transformer (Radio Shack no. 273-1610 or similar), telephone cord, power cord jack, wire, solder, hardware, etc.

Note: The following items are available from Weeder Technologies, P.O. Box 421, Batavia, Ohio 45103: An etched and drilled printed-circuit board (WTTS-B), $14.00; a kit of all board-mounted components (WTTS-C), $29.00; a pre-assembled circuit board (WTTS-A), $69.00. All orders must include $3.50 for shipping and handling. U.S. and Canadian orders only please. Ohio residents must add 6% sales tax. Above prices are for single units only, 2 Telephone Scramblers are required.

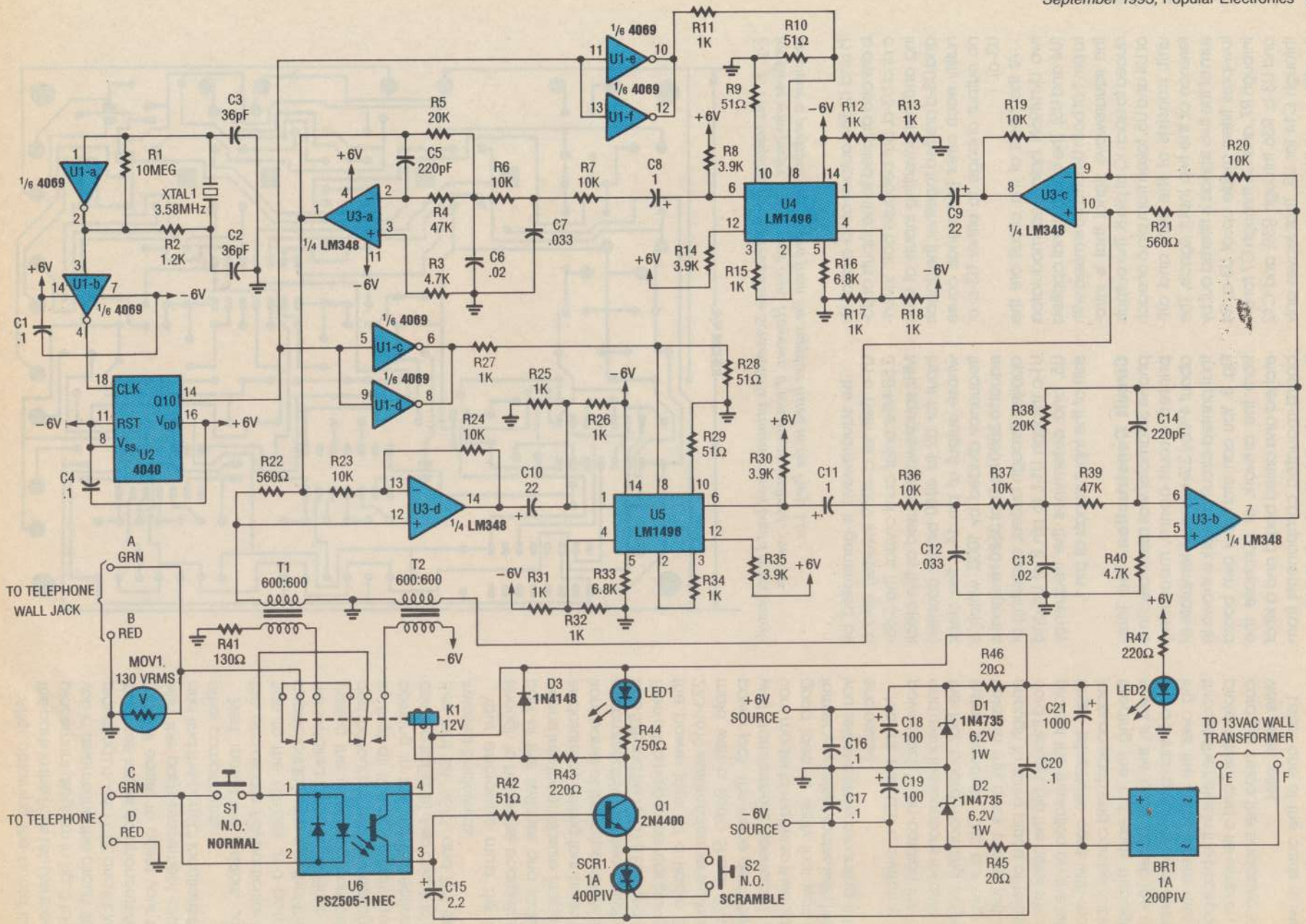

Fig. 2. The heart of the Telephone Scrambler is a pair of balanced modulators (U4 and U5), which are used in both scrambling and descrambling dialog.

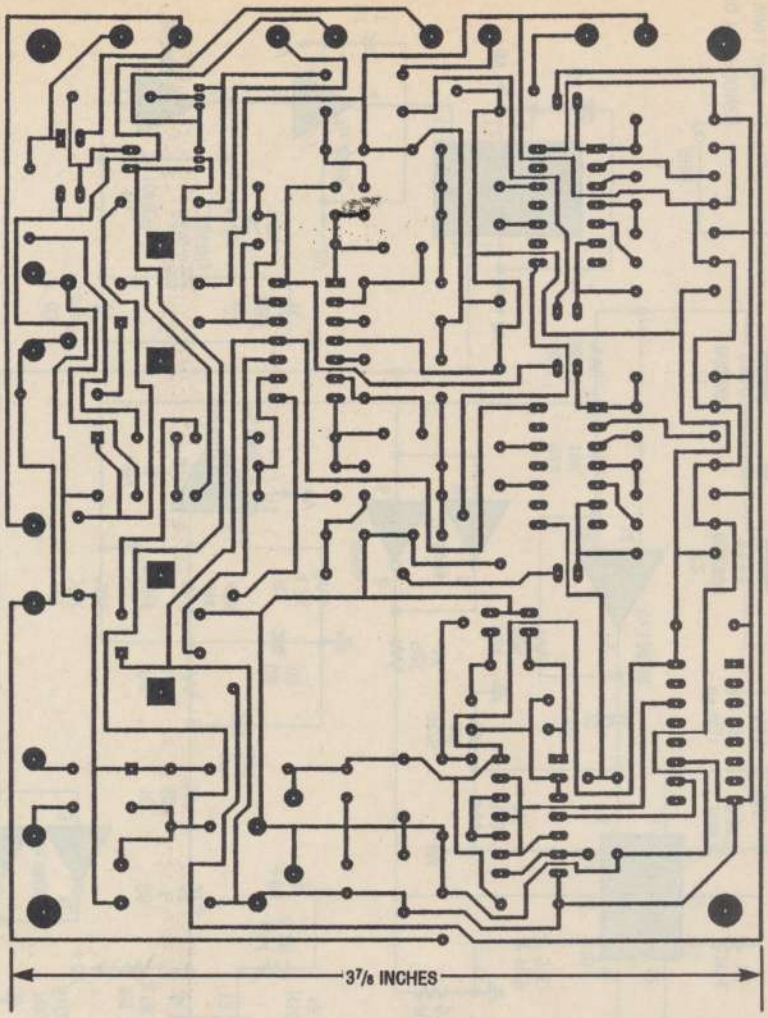

Fig. 3. This template for the Telephone Scrambler's printed-circuit board is presented for those who prefer to roll their own. However, if you are so inclined, you can purchase a prefabricated board from the supplier listed in the Parts List.

T1 and T2. The outputs of U3-a and U3-b are also applied to the inputs of U3-c and U3-d, but because both inverting and non-inverting inputs of U3-c and U3-d are tied together, the signals nullify each other (the signals cause no output change to either U3-c or U3-d).

At the heart of the circuit are the two LM1496N balanced modulators (U4 and U5). The audio signal applied to pin 1 of both U4 and U5 is mixed with the squarewave signal that is introduced to each IC at pin 8. The outputs of U4 and U5, taken from pin 6 of each unit, consists of the sum and difference of the two input signals. The sum of the two signals is filtered out by low-pass filters made up of U3-a, R4 through R7, and C5 through C7 for U4, and U3-b, R36 through R39, and C12 through C14 for U5. That leaves only the difference frequency.

The squarewave is generated by U1-a (⅙th of a 4069 inverter) and a 3.58-MHz color-burst crystal. The 3.58-MHz squarewave is used as the clock input for U2 (a 4040 binary counter) whose output at pin 14 is the clock frequency divided by 1000, which is equal to 3580 Hz. That 3580 Hz signal is applied through buffers, consisting of U1-c through U1-f, to pin 8 of U4 and U5, and determines the frequency shift of the input signals at pin 1.

Circuit Construction. The Telephone Scrambler was assembled in a printed-circuit board, measuring about 4⅞ by 3⅞ inches. A template of that printed-circuit artwork is shown in Fig. 3. You can etch your own board from the artwork, or purchase the etched and drilled board and a kit of board-mounted components from the supplier listed in the Parts List.

After obtaining the board and all the parts in the Parts List, use the parts-placement diagram in Fig. 3 to guide you in assembling the circuit. Start by mounting U1–U6, T1, T2, and K1. Mounting those larger components first will make it easier to orient your board with the parts-placement diagram and find the correct locations for the other components.

Next, mount the resistors, capacitors, and diodes. Pay particular attention to the diodes and polarized capacitors to make sure that they are not installed backwards. Finish by installing the remaining components and the four jumper connections. Verify that all IC's have their notches pointing in the right direction (according to Fig. 3). Also check to make sure that Q1, SCR1, and BR1 are not installed backwards.

Your enclosure must be large enough to house the board and any part of the switches and jacks that extend into the enclosure. Prepare the enclosure by drilling four holes in the front panel of the appropriate size to accommodate the two switches (S1 and S2) and two LED's (LED1 and LED2). Then drill a hole in the rear panel to fit the power jack. (If a Radio Shack 273-1610 wall transformer is used, it will mate with a Radio Shack 274-1563 power jack. The inside diameter of a wall transformer's connector varies from model to model so it would be a good idea to verify that wall transformer you select mates with the jack you select before mounting it to the enclosure.)

Mount the LED's, switches, and power jack. Then position the board and mark the locations for drilling. Drill the four board-mounting holes and install standoffs. Drill out two more holes in the back panel just, large enough to run a piece of telephone cord through. File the holes smooth to protect the insulation on the wires. A single telephone cord with modular jacks on each end can be cut in half, feeding the cut ends through the holes in the back panel. The author put a 2-inch piece of heat-shrink tubing over the cords where they pass through the holes in the back panel to protect them and a tie wrap on each cord just inside the enclosure to provide strain relief.

Label one of the cords TO WALL JACK

(Continued on page 92)

Computer Viruses: Scourge or Scam?

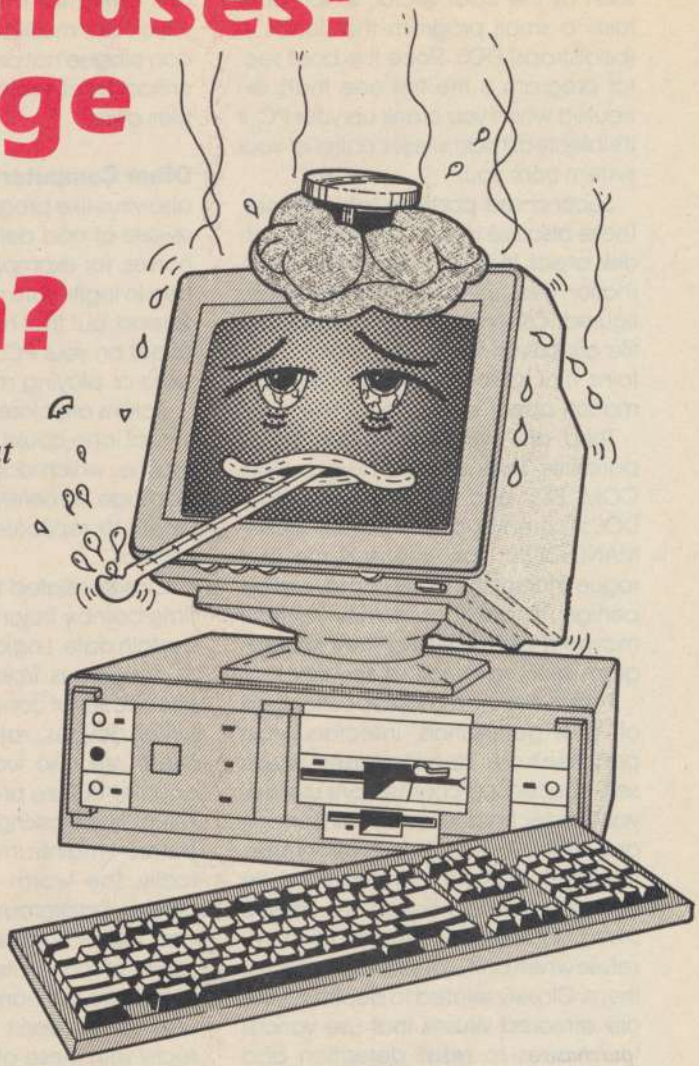

Cuts through the computer-virus hype and scare tactics to learn what viruses are, what they do, and what steps you can take to stop them cold.

BY KARL T. THURBER, Jr.

Wherever computer data resides, there's the potential for data loss. Most losses are from human accidents, software bugs, hardware-software incompatibility, power surges, and equipment failure. But computer viruses also cause data loss; that's the knotty problem we'll focus on in this article.

Do Computer Viruses Exist? Actually, viruses "don't exist" in the same way serious diseases like AIDS, cancer, and the Black Plague don't exist unless you are stricken. Then, computer viruses and health-related maladies—however rare—are as real as can be. While the impact of viruses on computer users is, for the most part, overblown and hyped, infectors can and do wreak havoc. The hype has had at least one positive effect: it's brought viruses front-and-center to the computing public's attention.

If nothing else, Hollywood believes in computer viruses. Twentieth Century Fox reportedly has a virus-theme techno-thriller, "Ghost in the Machine," in the can. According to *The Hollywood Reporter*, it's about a serial killer who is transformed into a computer virus that becomes obsessed with a woman and stalks her through a variety of computer devices.

What's a Virus? It's a contagious, rogue sort of software program that in some way interferes with or alters the way your computer operates without your permission or knowledge. The usual virus is a cleverly hidden program that can't be seen by casual searches. It intercepts disk I/O (input/output) and other operations and—if it's malicious—corrupts your data or program files, or scrambles your disk directory. Legend has it that in 1986, the first computer virus, Pakistani Brain, was discovered.

Computer infectors are much like biological viruses. For example, they have a life cycle of their own, first infecting one host and then spreading to others with which they come in contact. To reproduce, they replicate (or copy) themselves, but do so unnoticed, and they often remain concealed by attaching or leaching themselves onto other software programs where they're able to run undetected. While busy spreading themselves, viruses typically do nothing else until something triggers them, such as a particular date, time, or other event.

When triggered, viruses easily create havoc, paralyzing both individual and networked PC's. Many viruses are malicious and reflect a sabotage mentality among their authors. Destructive infectors damage your computer system or software programs by reformatting hard disk drives and destroying or corrupting files. Clever infectors can secretly write themselves to another disk when you copy files or transfer programs or data over telephone modem links.

Many infectors are relatively benign, often merely announcing their unwanted presence with a message or warning. However, nondestructive viruses, though not inflicting critical damage, are still annoying since they may waste valuable hard disk space; fill up the disk with multiple copies of the virus or other unwanted data; or display objectionable, mocking messages.

There are four major types of infectors that account for most of the estimated 3,000 viruses in circulation today. First are boot-sector viruses. These hard-to-detect tricksters reside

in normally hidden areas on your disk, such as the boot sector, which contains a small program that loads in (bootstraps) DOS. Since the boot sector program is the first one that's executed when you crank up your PC, if it's infected it can wrest control of your system from you.

Second are partition-table viruses. These also live in the normally hidden disk areas that contain critical information describing how the disk is configured. Others modify or attack the file allocation table (FAT), which contains vital table-of-contents-like information about every file on the disk.

Third are program viruses. These parasites seek shelter in your disk's COM, EXE, and SYS files—especially DOS's command interpreter, COMMAND.COM. The infected file is a rogue mutant that may or may not be benign. If malicious, it may commit mayhem before letting the host program execute its normal functions.

Fourth are even nastier collections of "new generation" infectors. Most prevalent are stealth viruses. These self- concealing chameleons use advanced techniques to remain hidden and blend in with their environment, tricking DOS into thinking that they're neither in memory nor on disk. They're smart, sometimes disinfecting themselves when antiviral software looks for them. Closely related to stealth viruses are armored viruses that use various techniques to resist detection and cleaning by encrypting themselves or causing the PC to crash when running an antiviral program or being disassembled for examination.

The more recently appearing "companion" viruses are very unfriendly. They look for certain EXE files; when found, they create similarly named hidden COM files that DOS executes before the EXE files that the user intended to run, and which may contain damaging instructions. Other, particularly troublesome, new breeds are self-encrypting, virtually undetectable polymorphic viruses. They are self-modifying viruses that change each time they infect the system. They include the virulent "mutation-engine" virus-replication technique, first seen in 1991, that allows viruses to infect a single PC with an almost infinite number of original strains. Such variations make it difficult for antiviral programs to scan for known virus "character strings." Equally harassing are versatile multipartite viruses, which are multifaceted infectors that can plague not only program files but critical boot sectors and partition tables alike.

Other Computer Rogues. There are also virus-like programs you should be aware of and defend against. Trojan horses, for example, are routines hidden in legitimate programs that don't spread, but that have some unknown effect on your PC, such as destroying data or playing musical sequences.

Trojans are closely related to viruses. In fact, one could argue that a trojan routine, which does limited one-time damage, is merely a virus without the ability to replicate itself to further its impact.

Closely related to Trojan horses are time bombs: Trojans set to trigger on a certain date. Logic bombs are equally dangerous Trojans triggered by a specific set of conditions that the virus writer devises, rather than by date. There are also worms, sophisticated counter-culture programs that mainly affect multitasking, networked computers—mainframes and minis. Typically, the worm is disguised as a proper background process, and it can infect hundreds or even thousands of computers in a few hours. We'll have our hands full here with viruses so we won't be concerned directly with these other interlopers.

Where Viruses Come From. However rare, computer viruses are out there and about three new viruses emerge each day. Viruses are a global problem: most come from the former communist countries in Eastern Europe (especially Russia and Bulgaria) and from Asia, typically as a medium for speaking out against the government.

Unlike Western virus authors, who are often fickle teenagers, Eastern virus creators tend to be professional computer programmers who are creative and intelligent, but who are also underpaid and frustrated. Reportedly, as many as 90 percent of the computers in such countries may be infected, against under 5 percent in the U.S. While many infectors originate elsewhere, they're an international problem that ultimately hits home.

Creating a "better" infector is a challenge to hackers. Those who create them typically release their virus codes embedded in other programs through public bulletin boards (BBS's) and disk distributors, and they trade pirated disks with others in which they have hidden their surprises. The hacker considers himself successful if his virus spreads wide and if the virus results in the effects he intended.

The result is many complicated virus "family trees." To cite one example, the common Jerusalem-B virus is derived from the original Jerusalem virus that first was isolated at Hebrew University in 1987. It, in turn, has spawned such variants as Jerusalem-C, Jerusalem-D, Jerusalem-E, Anarkia A and B, Spanish JB, Park ESS, Skism-1, Swiss 1813, Frere Jacques, Captain Trips, and many others. Its family tree is indeed complicated.

Are Your PC and Software Safe? How does a computer catch a virus? Infection occurs in two ways: either by booting from an infected diskette, or by running an infected program.

Fortunately, viruses seldom travel with regularly distributed commercial software (but they can, as we'll see). Companies publishing software have nothing to gain from ruining their product; original copies of so-called "freeware" and "shareware" are safe for the same reasons. However, many products with uncontrolled distribution have been modified by hackers who replace the originals on bulletin boards and even in disk collections. Thus, some SYSOP's and disk vendors—those who don't check contributions—unwittingly help spread viruses.

According to the Association of Shareware Professionals (ASP), shareware has received a "bum rap" for computer viruses. ASP claims that the biggest vehicle for the spread of computer viruses is actually commercial (retail) software. How can this be? Because many retailers accept returns of opened software. They reshrinkwrap and restock it, thereby exposing the next purchaser's PC to infection. On the other hand, most BBS SYSOPS (system operators) and disk vendors do take precautions against infectors.

If your PC is on a local-area network (LAN), you can take precautions and still become infected. A virus can in-

fect file servers as well as individual PC's. Any files that are available to network users can become infected, ultimately resulting in every PC on the network becoming contaminated. Users on college campuses and in large corporations seem to be especially at risk, where their LAN's become breeding grounds for prolific viruses.

Diagnosing and Removing Viruses. You needn't be paranoid about viruses. Besides practicing "safe computing" and having good disk backups, purchasing—and using—a trustworthy antiviral program is a good way to avoid virus trouble.

The better antiviral programs take multipronged approaches to protection, although most such programs are basically scanners that tell you if your PC is already infected by checking memory and the hard disk at boot-up. The more comprehensive programs do more: They are able to scan, recognize, and remove as many as 2,000 or more infectors; detect and intercept viruses before program execution; detect and clean viruses by verifying file checksums or cyclic redundancy check (CRC) calculations; provide protection for critical system areas; monitor hard and floppy disk operations to detect unusual, virus-like activity; and even create an emergency disk on which vital system information is stored to help you recover in case of a computer crash.

The more sophisticated programs monitor and protect all sorts of PC activity and allow you to configure and customize the way the program operates and what it checks. Choices may include monitoring DOS interrupts, protecting COMMAND.COM, monitoring high memory, flagging new programs and those with changed signature codes, and protecting overlay and system files.

Scanning is the simplest way to detect viruses. Of course, since these programs only compare disk data with known virus codes, to use scanning programs effectively you need to always have their latest version on hand. This is particularly true when fending off viruses that mutate and evolve.

However, there are sophisticated "differential-detection" systems that check individual files and critical disk-area integrity signatures, which are promising in this area. Integrity checkers record checksums or CRC calculations, or execute proprietary routines that let the checker determine if files have been modified, possibly by a virus. However, such programs generate false alarms and degrade performance. Another technique is inoculation, in which some antiviral programs modify files with code to prevent viruses from attacking them; however, this procedure alone is only effective against single viruses.

What if you don't want to mess with antiviral programs? To be honest, antiviral software is worth its cost and trouble, especially if your PC is used by others, if you exchange program disks with others, or if you download untested software from BBS's. But if you don't do these things, you may feel that viral protection programs are overkill since infections are relatively rare. At least, minimize risk by adhering to disciplined backup procedures and by being selective in running "foreign" programs.

Besides just being careful and following the self-protection tips we offer later on, you can perform a few simple antiviral checks of your own. It's possible to use the DOS program CHKDSK (from an original DOS disk) to ensure that you have full conventional memory (640K, or 655,360 bytes) available. If CHKDSK reports less without other programs loaded, you may have a virus hiding in memory. You can also note the exact file size of an uninfected copy of COMMAND.COM. Compare its size against the copy on your hard disk to see if an infector has attached itself to the processor and

The Computer-Virus Hit Parade

Although there's no evidence of a virus epidemic of such magnitude that you should be afraid to turn on your PC—despite all the hype and scare tactics of some antiviral software publishers—infectors do exist, and you should be aware of them. They bear such exotic names as Devil's Dance, AIDS, Icelandic, Bad Boy, Boot Killer, Pentagon, Chameleon, Tequila, Cascade, World Peace, Pakistani Brain, and Den Zuk, to name a few.

While we won't attempt to award Oscars to the most common viruses, we'll briefly tell you about five common strains:

Stoned—This is one of the most common viruses, reportedly written by a New Zealand youth in 1987. With aliases like Donald Duck, Marijuana, Rostov, and others, it infects the hard-disk partition table and floppy-disk boot sectors. The virus takes several forms, most of which are memory resident. It hides by moving the disk's boot sector and placing its own code where the boot sector should be. The ugly part is that it corrupts your disk's vital file allocation table (FAT). Beware of infection by this virus if you see the message, "Your PC is now Stoned!"

Michelangelo—This gem is from the Netherlands or Sweden and was first seen in 1990. Michelangelo, which is related to the Stoned virus, is a memory-resident infector of hard-disk partition tables as well as floppy-disk boot sectors. On March 6, the birthday of the Italian architect and painter, the virus announces itself by overwriting disk data with characters from system memory—random garbage—making data recovery impossible.

Jerusalem-B—This is a member of a large virus family; it's also known by the aliases PLO, Friday the 13th, Black Box, Arab Star, and others. It is one of the most common viruses, residing in COM, EXE, SYS, and program overlay files. Its main dastardly deed is to erase every program executed each Friday the 13th. It has been altered countlessly over the years, and many other viruses have been based on its code. Despite its middle eastern moniker, it's now thought to have originated in Italy.

Dark Avenger—Sometimes called Black Avenger, Eddie, and Diana, among other aliases, it is vintage 1989 and originated in Bulgaria. It infects COM and EXE files, including COMMAND.COM, and it can become memory resident. After infecting every sixteenth file, Dark Avenger overwrites a disk sector of its choice to destroy any data present in the sector. Programs and datafiles that have been corrupted by a sector being overwritten can't be repaired since the original sector is lost.

Disk Killer—Also known as Computer Ogre, Disk Ogre, and Ogre, this boot-sector infector from Taiwan was first seen in 1989. It spreads by copying itself to floppy- or hard-disk sectors with the potential to destroy whatever data is present—it doesn't care whether blocks are in use by another program or a datafile. At a certain point after initial infection, the virus effectively encrypts hard disk data, rendering the disk's data useless. Your only option: reformat your disk. ■

increased the size of the program code.

Uninvited Visitors. In this article, we're concerned mainly with viruses. But to inhibit them and to prevent other intrusions, you may need to take additional steps to protect your PC from assault, especially if your PC is connected to a network or telephone line, or if others have access.

Plugging loopholes includes proper use of passwords; not leaving your PC unattended; keeping unauthorized persons away from your PC; disconnecting the computer from the telephone line; and using the power switch, keyboard, and floppy drive locks. Restricting access may also include the use of password-protection utility programs, boot-up protection-and-control software, disk or directory locking, program approval, file encryption, screen savers, and other more draconian protective measures.

The Virus Busters. There are organizations a PC owner can turn to for help. For example, there's The National Computer Security Association (NCSA), which helps users improve the security and integrity of their computer systems and reduce the threat of computer infection. NCSA conducts research on computer security, virus and data-integrity problems, and evaluates antiviral programs.

The association operates a support bulletin board that's open to nonmembers, publishes a six-times-a-year newsletter, offers a virus self-defense kit, distributes books on computer-security topics, issues research reports and a computer virus survival guide, and conducts computer-security seminars. NCSA also operates a virus library and laboratory. Individual memberships are $45 per year.

Also, McAfee Associates publishes virus detection and removal software for the IBM PC and compatibles. John McAfee is highly respected in the antivirus community, and he maintains one of the largest virus libraries in the world. He also supports his shareware antiviral products (CLEAN, SCAN, SCANRES, VIRUSCAN, and others) through a 32-line BBS and on CompuServe in the McAfee Virus Forum (type "GO MCAFEE" or "GO VIRUS FORUM" at any "!" prompt).

Further, noted virus researcher Patricia Hoffman operates the VSUM Virus Library. She also offers a shareware reference catalog of all known viruses, the Virus Information Summary List, or VSUM for short.

VSUM, which uses hypertext technology to help you find information quickly and easily, is not an active antiviral program. Rather, it's a massive reference source that presents the cumulative knowledge of an ongoing research effort in the detection, identification, and removal of MS-DOS infectors. It provides virus characteristics, history, and family trees; gives common infection symptoms; shows how to remove viruses; and provides statistical information on how antiviral software stacks up. VSUM includes a virus index and virus crossreference data.

You can download VSUM from CompuServe and many BBS's. Registration is $30, which includes free updates for a year; add $10 for the program on diskette. VSUM can be obtained from VSUM at the address given elsewhere in this article. For your information, Hoffman also maintains the virus watchdog BBS, Excalibur, at 408-244-0813.

Virus Self-Protection Tips. The proverbial ounce of prevention can be worth a real pound of cure: Be aware of viruses and consider purchasing a good virus-detection and repair program. You may never be bothered by computer viruses if you exercise basic virus hygiene and care.

So, what can you do to protect yourself from catching a computer virus? Here are some practical suggestions:

- Write protect your original disks and those you're not actively using. Never copy anything onto the original.
- When making copies, check file sizes before and after. See if they have changed, particularly if they've become larger.
- Stay away from questionable software sources. Well-established, reputable shareware and public-domain software firms are probably okay, since most check the disks and files they sell.
- Be wary of loaned-out, passed-around, exchanged, and pirated commercial software, especially copy-protected programs where a hacker has removed the protection and possibly inserted a virus. Similarly, minimize the use of the "sneaker net" in offices.
- Use an antiviral product regularly on your hard disk and floppies. Keep the program updated to catch new viruses.

Names and Numbers

Central Point Software
15220 NW Greenbrier Pkwy. #200
Beaverton, OR 97006
Tel. 800-445-4208, BBS: 503-690-6650 (2400 bps), 503-690-4777 (9600 bps)

Levin & Associates
9405 Bustleton Ave., PO Box 14546
Philadelphia, PA 19115
Tel. 215-333-8274.

McAfee Associates
4423 Cheney St.,
Santa Clara, CA 95054
Tel. 408-988-3832, BBS: 408-988-4004

National Computer Security Association (NCSA)
227 W. Main St.,
Mechanicsburg, PA 17055
Tel. 800-488-4595

Ontrack Computer Systems, Inc.
6321 Bury Drive
Eden Prairie, MN 53346
Tel. 800-872-1333

Ontrack Data Recovery
6321 Bury Drive
Eden Prairie, MN 53346
Tel. 800-872-2599

Penguin Portables
119 Witmer Road
Horsham, PA 19044
Tel. 800-241-1096

Software Concepts Design
594 Third Avenue,
New York, NY 10016
Tel. 212-889-9730, BBS: 212-889-6438

Symantec Corporation
2500 Broadway, Suite 200
Santa Monica, CA 90404-3063
Tel. 800-441-7234, BBS: 408-973-9598

Trend Micro Devices Inc.
2421 W. 205th St., Suite D-100
Torrance, CA 90501
Tel. 310-782-8190

VSUM Library (Patricia Hoffman)
3333 Bowers Ave., Suite 130
Santa Clara, CA 95054
Tel. 408-988-3773, BBS: 408-244-0813

XTree Company
4115 Broad Street, Bldg. 1
San Luis Obispo, CA 93401-7993
Tel. 800-388-3949

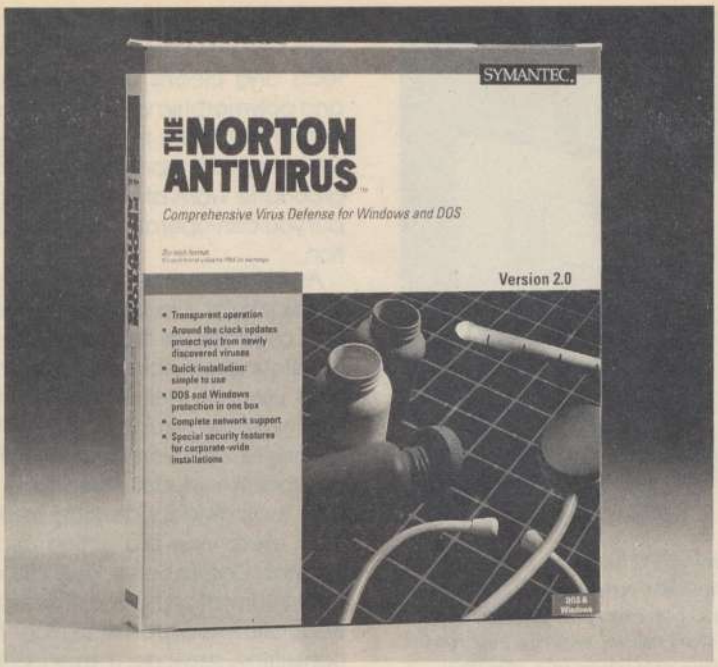

Norton AntiVirus for DOS and Windows includes both applications in a single package. It's designed to work automatically, transparently, and continuously in the background, looking for over 1,400 viruses and strains without interfering with your PC.

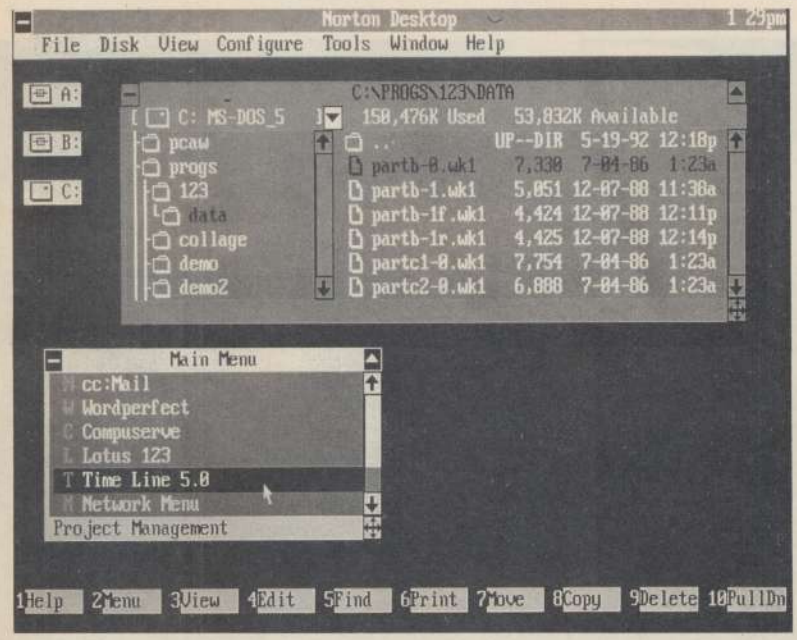

Norton Desktop for DOS (NDD) combines an easy visual interface with utilities that make computing easier. Besides data backup and disk optimization, NDD includes The Norton AntiVirus, accessed through the Tools Menu. NDD is also equipped with the most-needed disk repair and file recovery features of The Norton Utilities in a $179 bundle.

• Only download software from BBS's where you know the SYSOP scans software before posting it. Downloading files from most BBS's is safe, despite contrary popular opinion.

• Use only original, shrink-wrapped commercial software and make sure the shrinkwrap hasn't been altered. Be aware that some software dealers rewrap and resell returned software.

• Don't let other people run their programs on your PC. Their disks could be already infected.

• Spot-check key existing programs regularly, noting any changes in executable-file size.

• Check for viruses on new computers before using them. Also, scan your system after repairs have been made, since repair-shop diagnostic diskettes may be infected.

• Regularly back up your data and programs—preferably the whole hard disk for safety's sake, not just changed data. Rotate between at least two sets of backup disks or tapes.

• Have a bootable, write-protected DOS floppy disk on hand should your PC need to be rescued from a system crash.

• Scan all software before placing it on your hard drive.

• Don't absent-mindedly leave a floppy in the disk drive when you want to reboot from the hard disk. If the floppy is infected, you can instantly contaminate the hard disk.

• Make your executable files "read-only." This isn't sure-fire but can counter some viruses that attack executable files.

• If a virus strikes, seek help promptly. If you're a member of CompuServe or another online utility, log on (using another PC) and seek help. On CompuServe, there are several places to obtain this help. These include the McAfee Forum (GO MCAFEE or GO VIRUSFORUM), the Symantec/Norton Utilities Forum (GO NORUTL), and the Fifth Generation Systems (GO FIFTHGEN). If you suspect infected shareware, check with the Association of Shareware Professionals (GO ASPFORUM). You can also call the NCSA at the toll-free number given elsewhere in this article.

• If you suspect your PC has contracted a virus, don't panic: take things slowly to avoid destroying more data. Turn the PC off, leave it off for at least 15 seconds, and reboot from an original, write-protected DOS disk.

Stuart Hanley, Engineering Manager of Ontrack Data Recovery, puts the tendency to panic into perspective: "Don't assume that 'all is gone' when a virus hits; there may or may not be total data destruction. Often, software utilities or commercial data-recovery services can help you get your data back. So don't be too quick to reformat your hard disk and re-initialize your data. Be sure the data's really gone before you do so."

Commercial Antiviral Software. Several software juggernauts have

launched aggressive assaults on computer infectors. Highly-ranked antiviral programs include The Norton AntiVirus (NAV), Dr. Solomon's Anti-Virus Toolkit, and Central Point AntiVirus (CPAV). While there are many other antivirus products, we'll focus on those.

Let's start with Norton AntiVirus from Symantec Corporation. Norton Anti-Virus for DOS and Windows works automatically, transparently, and continuously in the background, looking for any of over 1400 viruses. The program protects against infection and repairs already-damaged files. It scans for viruses whenever a program is run or launched, and every time a file is copied or removed. If an infector is detected, AntiVirus stops its further spread.

Recent versions boast network compatibility, detection of all viruses in the NCSA library, Windows background scanning and scheduling, and detection of polymorphic viruses. You can protect against new viruses by adding "virus definitions" available from Symantec via FAX, telephone, BBS, or the Symantec Forum on CompuServe. You can also obtain updates by subscribing to Symantec's quarterly disk service, which provides new virus signature codes. The package lists for $125.

Next, there's Dr. Solomon's Anti-Virus Toolkit. Dr. Alan Solomon developed this highly regarded antiviral package that provides an easy-to-use means to detect, identify, and safely dispose of more than 2000 infectors. Program features include FindVirus, a scanner that detects, identifies, and finds virus solutions; ChkVirus, a differential detector that creates integrity signatures of all COM, EXE, SYS, OVL, and BIN files, plus the disk boot sector and partition code (rather than relying only on known virus signature codes); and Virus Guard, a memory resident, real-time scanner and floppy "authorization program."

The basic program is $149.95 from Ontrack Computer Systems. Ontrack offers two update levels. First is the Standard Update Program ($65/yr.), which consists of quarterly update diskettes. Advanced protection is $195 for their Virus Immunization Program (VIP) that offers monthly update diskettes and technical digests, emergency service, FAX bulletins, and a 24-hour BBS.

The future of PC security, including defense against viruses, has hardware overtones. For example, StationLock embeds workstation security and rule-based virus protection in a chip that provides 13 master settings to prevent data theft, accidental loss, computer virus attacks, and unauthorized viewing of files.

Third, there's Central Point AntiVirus for Windows and DOS. CPAV at $129 offers comprehensive, transparent, and automatic antiviral solutions. It combines virus detection and removal with file repair and immunization, detecting and countering more than 1,300 infectors. It reportedly detects and cleans unknown, stealth, and polymorphic viruses, and it allows immunized files to be transferred. CPAV normally operates in the background to warn of suspicious activity, but you can operate it as an application.

As with its competitors, the trend at Central Point is to treat computer viruses as problems that need constant monitoring, especially in networks. To help users of their software protect against known viruses and new strains as they're discovered, Central Point's approach includes telephone support for individual desktop and network users; virus-protection updates via mail, CompuServe, and BBS; a 24-hour information hotline; training and education programs; and antiviral consulting services. It even offers a quick-response "virus eradication team" (VET) that's available for dispatch within 24 hours to any problem site in the U.S.

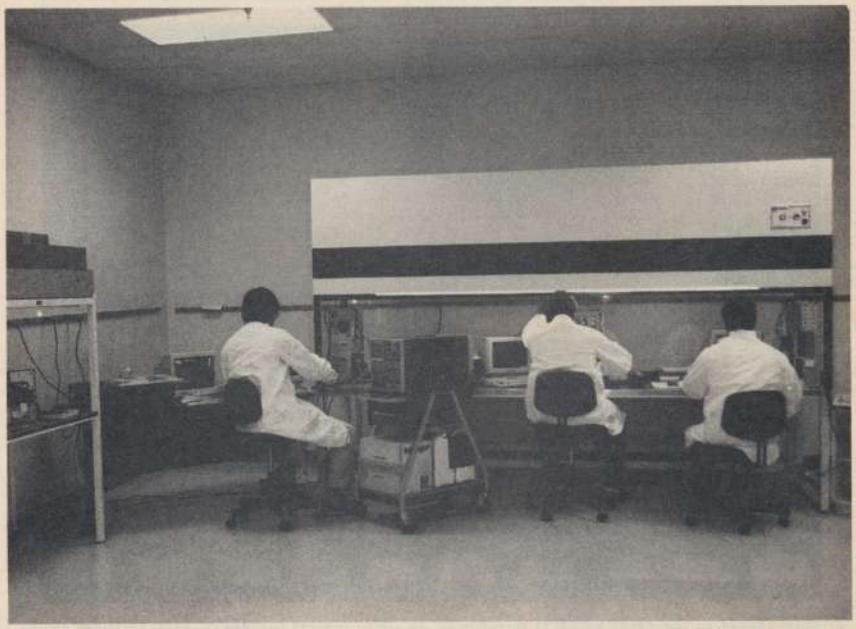

Data recovery is retrieving information from hard drives or floppies that have become unreadable by conventional means. Ontrack Data Recovery rebuilds information from drives damaged from power surges, hardware glitches, and virus attacks. To prevent airborne particles from doing further harm during repair, Ontrack has a Class 100 certified clean room for work on opened hard drives.

Shareware and Freeware. There are dozens of shareware and freeware virus-detection and repair programs. Some are good and some are not; to tell the difference, your best bet is to ensure that the program you se-

(Continued on page 93)

These days, like most consumer goods, doorbells are treated as a "throw-away" item—the cost of repairing one invariably exceeds the cost of buying a new one. If your doorbell has broken down or if you don't already have one, then here's an ideal opportunity to build a deluxe unit for yourself.

When the doorbell switch is pressed, the project generates the familiar "ding-dong" sound by sequentially feeding the outputs from two tone generators to a small power amplifier. Those tone generator outputs are fed to the amplifier via separate CMOS FET's that act like variable resistors to give the required decay characteristics. Power for the circuit is derived from a 6-volt battery pack, consisting of four 1.5-volt AA cells. If you use alkaline types, they should last for about one year or so. Alternatively, you could replace the batteries with a 6-volt 300-mA power adapter and forget about the batteries.

Block Diagram. Figure 1 shows a functional block diagram of the Doorbell circuit. We'll just go through it briefly at this stage so that you will understand the basic theory of the circuit. The front doorbell switch is connected to a debounce circuit to prevent false triggering due to switch-contact bounce or due to spikes generated in the switch leads by nearby lightning strikes or power-line transients.

From there, the output is fed into two monostables multivibrators. The multivibrators provide the correct time delay between the two tones for the doorbell. Each monostable is connected to a voltage-controlled resistor network, which is used to modulate the outputs from the tone oscillators to give the characteristic ringing sound. The outputs from the voltage-controlled resistor stages are then fed to the audio amplifier and from there to the loudspeaker.

We've pulled a rather neat trick with the audio amplifier stage, however. Because the circuit is powered continuously, we have to make the quiescent current (*i.e.* the current flow when the circuit is in its idle stage) as low as possible to conserve the batteries.

By using CMOS IC's in the front end, we have no problems here, but we have to control the quiescent current of the audio amplifier. The easiest way to achieve that is to use the monostable outputs to control the DC bias of the amplifier via an OR gate.

When the circuit is idle, the monostable outputs are low and no forward bias is applied to the amplifier. Thus, the quiescent current drawn by the audio amplifier is reduced to zero. Conversely, when either monostable output is high, the output of the OR gate is also high and bias is applied to the amplifier, which then operates as normal. That allows us to keep the quiescent current down to only 160 μA. Not bad, huh?

A LOW-COST ELECTRONIC DOORBELL

Has your doorbell broken down? This unit uses readily available parts to produce a realistic and pleasant "ding-dong" sound

BY DARREN YATES

Circuit Diagram. Figure 2 shows the complete schematic diagram of the Electronic Doorbell circuit. The project is based on two common CMOS IC's and six transistors. Let's start with the doorbell switch. Resistor R1 (a 2.2-megohm resistor), C1 (a 0.1-μF capacitor), and U1-a (⅙th of a 74C14 hex Schmitt trigger) form a debounce circuit. The debouncer, as it is called, cleans up the waveform produced by bouncing switch contacts, producing clean (ripple free) positive-going pulse at pin 2 of U1-a each time S1 is pressed.

The positive-going output of U1-a is then AC-coupled to the first monostable stage, which consists of U1-b, C3 (a 0.1-μF capacitor), and R2 (a 4.7-megohm resistor). Normally, pin 5 of U1-b is held low by via R2, so its output at pin 6 is high, keeping PNP transistor Q1 turned off. When pin 2 of U1-a goes high (*i.e.*, when S1 is pressed), U1-b's output at pin 6 immediately switches low. Pin 6 of U1-b then switches high again a short time later on the trailing edge of the input pulse, as set by the RC time constant on pin 5.

When pin 6 of U1-b goes high again, the second monostable based on U1-c is triggered into action. This monostable works in exactly the same manner as the first and switches its pin-8 output low for a brief period. Thus, the two monostables work in a sequential fashion, with U1-b first briefly switching low and then U1-c doing the same.

Voltage-Controlled FET's. Transistors Q1 and Q2 buffer those outputs and in turn drive the voltage-controlled resistor stages, U2-a and U2-b. Those stages are actually the N-channel FET's from a 4007 dual CMOS complementary pair.

When pin 6 of U1-b goes low, Q1 turns on and quickly charges C8 (a 2.2-μF capacitor). That turns on U2-a by pulling pin 3 (the N-channel FET's gate terminal) high, so that it now passes the signal from tone-oscillator U1-d.

*This article first appeared in the May, 1992 issue of Silicon Chip and appears here by permission.

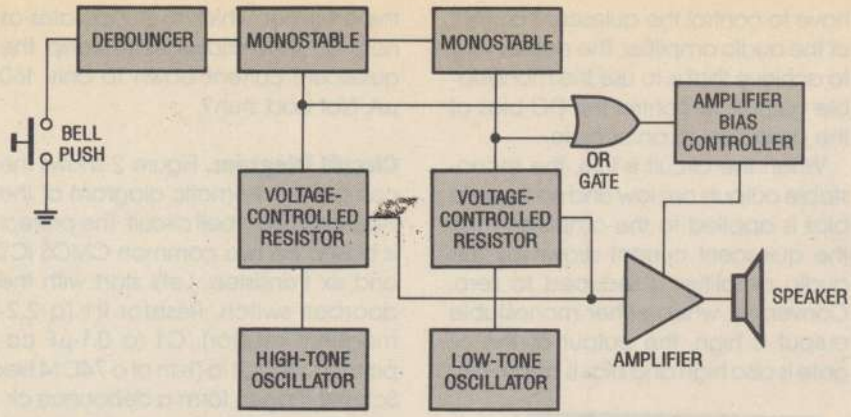

Fig. 1. Here is a functional block diagram of the Electronic Doorbell. When the doorbell switch is pressed, the two monostables stages are activated in sequence, applying bias to a pair of voltage-controlled resistor stages, which then modulate the outputs from a pair of tone generators, and the resulting signals are then fed to an audio amplifier, and then to the speaker.

causing U2-b to turn on, passing the signal from the second tone oscillator, U1-e.

The two tone oscillators (U1-d and U1-e) are standard Schmitt-trigger configurations with RC feedback components. Gate U1-d is the high-tone oscillator and U1-e is the low-tone oscillator. Or, to put it another way, Q1, U1-d, and U2-a produce the "ding," while Q2, U1-e, and U2-b produce the "dong."

Output Amplifier. The outputs U2-a and U2-b are mixed via R10 and R13, and coupled to the base of Q3 via C9. A 0.33-µF capacitor, connected to the base of Q3, filters the waveform to give it a more "mellow" sound.

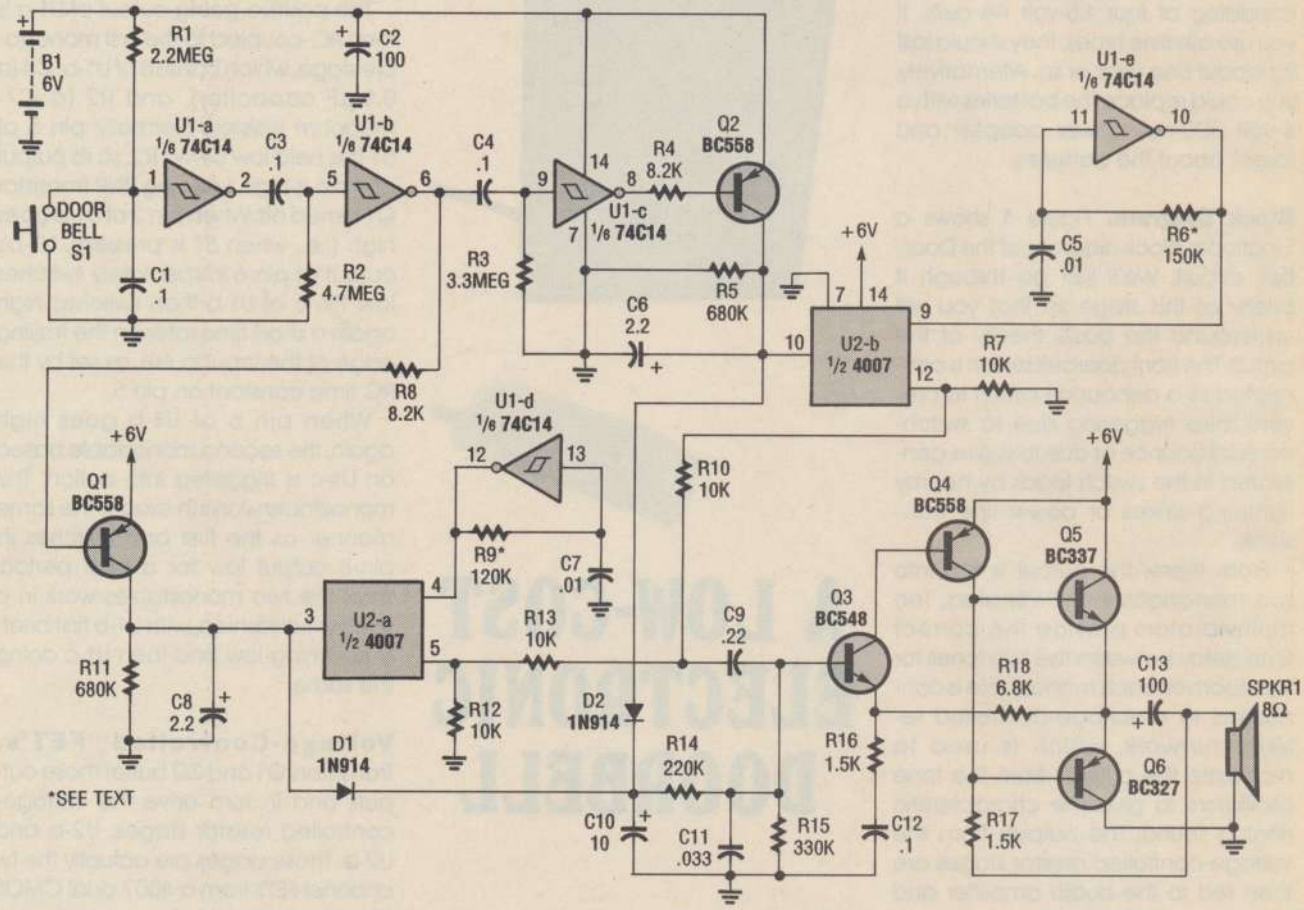

Fig. 2. The voltage-controlled resistors (mentioned earlier) used in the Electronic Doorbell are actually a pair of FET's from a 4007 IC (U2-a and U2-b in this schematic diagram). When S1 is pressed, Q1 turns on, forward biasing to U2-a, which, in turn, feeds the oscillator signal to the base of Q3. After a period, Q1 turns off and Q2 turns on forward biasing U2-b, which then feeds the tone-oscillator signal to the base of Q3. From there, the signal goes to the output amplifier and then to the speaker.

When pin 6 of U1-b goes high again, Q1 turns off and C8 discharges via parallel-connected R11. That sets the decay time for the tone-oscillator signal. As the voltage across the C8 decreases, the source-drain resistance of U2-a increases so that the signal level at its pin-5 output decays to zero.

Transistor Q2, U2-b, and U1-e operate in exactly the same fashion. When Q1 turns off, Q2 immediately turns on,

The audio amplifier is a fairly standard 4-transistor, Class-B arrangement; note, however, that no fixed bias is applied to Q3 or to the complementary output pair (Q5 and Q6). Transistor Q3 is wired as a common-

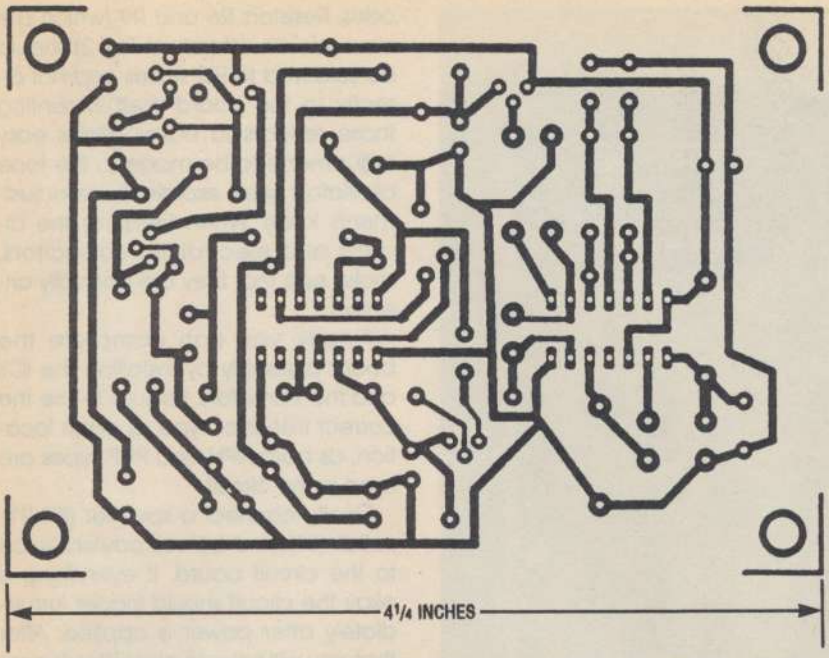

Fig. 3. The prototype of the Electronic Doorbell was assembled on a printed-circuit board measuring about 4¼ by 2¹⁵⁄₁₆ inches. A template of that printed-circuit pattern is shown here full size.

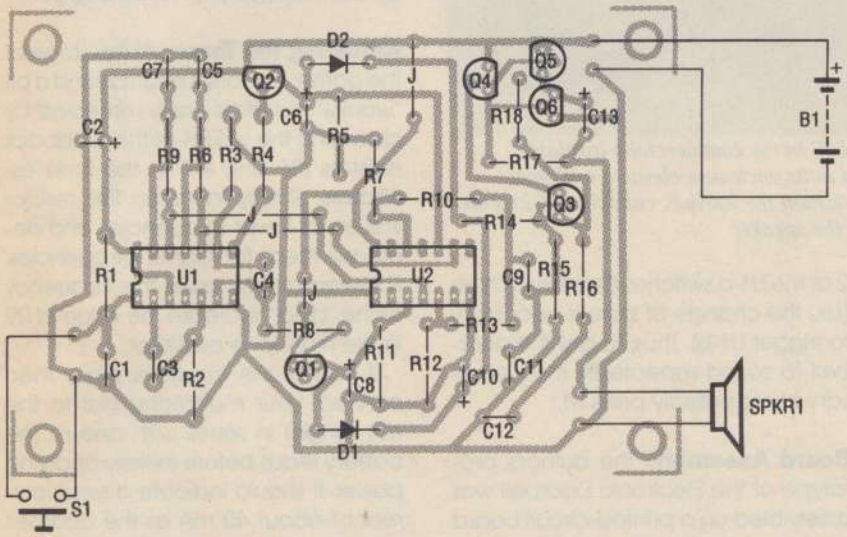

Fig. 4. Guided by this parts-placement diagram, you can install the parts on the board in any order, but take care with the orientation and placement of the transistors and IC's. Note that two resistors (R6 and R9) may need adjusting to get the correct tones.

emitter amplifier and provides most of the voltage gain. Its collector output drives Q4, which, in turn, functions as a driver stage for Q5 and Q6.

Note that R17 (a 1.5k resistor), which provides base bias for Q6, has been connected to the output rather than to ground. Because Q5 and Q6 together function as an emitter follower with a voltage gain of almost unity, there is almost no AC voltage across R17. That means that very little signal current flows through R17; thus, its impedance does not load the output of the preceding stage, Q3. That technique, called "bootstrapping," results in greater signal output.

The gain of the amplifier is set to approximately 4.5 by the ratio of R17 and R18. The amplified audio signal appears at the emitters of Q5 and Q6 and is coupled to SPKR1 via C13.

Bias Control. The DC bias-control circuit for the amplifier is quite simple, but very effective in reducing the quiescent current to zero under no-signal conditions.

A diode OR gate (comprised of D1 and D2) drives a voltage divider, consisting of R14 and R15. The voltage developed at the junction of that

PARTS LIST FOR THE LOW-COST ELECTRONIC DOORBELL

SEMICONDUCTORS

U1—74C14 hex Schmitt-trigger inverter, integrated circuit
U2—4007 complementary pair plus inverter, integrated circuit
Q1, Q2, Q4—BC558, SK3466, ECG159, or similar PNP silicon transistor
Q3—BC548, SK3122, ECG123AP, or similar NPN silicon transistor
Q5—BC337, SK3124A, ECG123AP, or similar NPN silicon transistor
Q6—BC327, SK3466, ECG159, or similar PNP silicon transistor
D1, D2—1N914 general-purpose, small-signal silicon diode

RESISTORS

(All fixed resistors are ½-watt, 1% units, unless otherwise noted.)
R1—2.2-megohm, 5%
R2—4.7-megohm, 5%
R3—3.3-megohm, 5%
R4, R8—8200-ohm
R5, R11—680,000-ohm
R6—150,000-ohm
R7, R10, R12, R13—10,000-ohm
R9—120,000-ohm
R14—220,000-ohm
R15—330,000-ohm
R16, R17—1500-ohm
R18—6800-ohm

CAPACITORS

C1, C3, C4, C12—0.1-µF, 63-WVDC, ceramic-disc
C2, C13—100-µF, 16-WVDC, electrolytic
C5, C7—0.01-µF, 63-WVDC, ceramic-disc
C6, C8—2.2-µF, 25-WVDC, electrolytic
C9—0.22-µF, 63-WVDC, ceramic-disc
C10—10-µF, 16-WVDC, electrolytic
C11—0.033-µF, 63-WVDC, ceramic-disc

ADDITIONAL PARTS AND MATERIALS

B1—Four AA batteries (see text)
SPKR1—8-ohm speaker
Printed-circuit materials, enclosure, battery holder and connector, insulated hook-up wire, solder, hardware, etc.

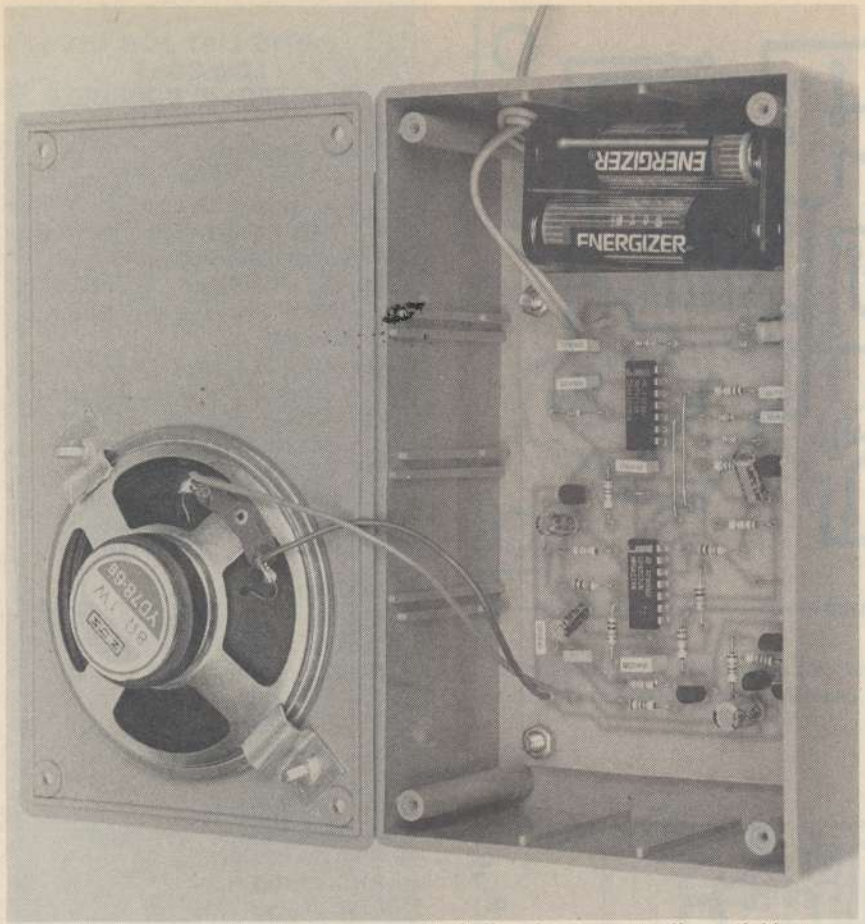

This view shows the completed electronic doorbell in the commercially available enclosure. The printed-circuit board is secured in its enclosure elevated on 5-mm tapped standoffs. Note: It may be necessary to mount the 100-µF, capacitor (C2) with its body flat against the board so that it clears the speaker.

voltage divider then provides the DC bias for the audio amplifier. Let's see how it works.

When S1 is pressed, Q1 immediately turns on as described previously and pulls D1's anode high. Thus, the output of the diode OR gate (D1 and D2) also goes high, applying approximately 3.2 volts of DC bias to the base of Q3 via the voltage divider. Similarly, when Q1 turns off and Q2 turns on, the output of the diode OR gate is pulled high via D2 and base bias is applied to Q3 as before.

When the output of the OR gate subsequently goes low (*i.e.*, at the end of the two tones), C10 immediately begins discharging via R14 and R15. That progressively removes the DC bias from Q3 over a 5-second period, effectively shutting the amplifier down until S1 is pressed again.

By the way, if S1 is pressed and held down, the doorbell will only operate once and then stop. That's because U1-b can only be triggered when pin 2 of the U1-a switches from low to high (*i.e.*, the change of state is necessary to trigger U1-b). Thus, to get the doorbell to sound repeatedly, it is necessary to repeatedly press S1.

Board Assembly. The author's prototype of the Electronic Doorbell was assembled on a printed-circuit board measuring about 4¼ by 2¹⁵⁄₁₆ inches. A template of that printed-circuit pattern is shown in Fig. 3. Once you've etched the board, check it carefully by comparing it with the original pattern. If you find any defects, correct them immediately. Afterward, construction can begin.

Guided by Fig. 4, begin by installing the four jumper wires: two just above U1, another to the left of Q4, and the last one to the left of U2. Make sure that the jumper connections are straight, so that they don't short against other parts.

Once the jumpers are in place, install the resistors, capacitors, and diodes. Resistors R6 and R9 (which are marked with asterisks in Fig. 2) should be soldered to PC stakes and not directly to the board itself. Mounting those resistors to stakes allows easy adjustments to be made to the tone oscillators (we'll explain those adjustments later). When installing the diodes and electrolytic capacitors, make sure that they are correctly oriented.

Finally, you can complete the board assembly by installing the IC's and the transistors. Be sure to use the correct transistor type at each location, as both NPN and PNP types are used in the circuit.

Finally, connect a speaker (SPKR1), switch (S1), and a 6-volt power source to the circuit board. If everything is okay, the circuit should trigger immediately after power is applied. After that, you will have to press S1 to trigger the circuit—disconnecting and reconnecting the battery will not do the job unless C2, which is connected across the supply, is first discharged.

Adjusting the Tones. At this stage of the game, the tones might sound a bit "wonky," but that's easily remedied by changing the values of the feedback resistors (R6 and R9) in the tone oscillators. Simply increase the resistor values for lower frequencies and decrease them for higher frequencies. For example, to lower the frequency of the "ding," increase the value of R9 in the high-tone oscillator.

If you're the cautious type, then connect your multimeter (set to the mA range) in series with one of the battery leads before initially applying power. It should indicate a peak current of about 40 mA as the doorbell sounds, but that should then rapidly decay to about 160–170 µA after 10 seconds or so.

If you get any readings other than those, (*e.g.*, if you get a continuous current of 40 mA or more), switch the circuit off immediately and check for wiring errors. In particular, check for incorrectly oriented parts and for shorts between adjacent IC pads on the copper side of the board.

Final Assembly. Once the circuit is working correctly, you can install it in a case. If desired, you can dress up the project's enclosure by attaching an

(Continued on page 92)

TWO TOOLS TO TACKLE

BY JAMES E. TARCHINSKI, N8PTG

Perfect for a novice, but useful for even an expert, these test tools can be built in only a few hours.

It's common knowledge among electronics hobbyists that not having the right tool can make the difference between an easy repair or troubleshooting job and a difficult one. But what many hobbyists don't realize is that "the right tool" doesn't necessarily mean the most complex, and it certainly doesn't mean the most expensive. There are a number of useful additions to your workbench that you can build at a cost of only a few dollars and a couple of hours of your time.

This article describes two such inexpensive tools—a *Continuity Tester* and a *Digital Logic Probe*—that will be welcome additions to your electronics arsenal. And once you've used these two instruments for a while, you'll wonder how you ever got along without them. Since the Continuity Tester is the simplest of the two instruments, we'll deal with it first.

The Continuity Tester. Figure 1 is the schematic diagram of our simple Continuity Tester, which consists of a lamp (I1) and a battery (B1) connected in series. An alligator clip is attached to one end of that series-connected pair, and a probe tip connected the other end. When the ends of the Continuity Tester are connected to two points in the circuit under test and there exists a continual path between the two points, the lamp will light, indicating that the points are electrically connected.

Because the Continuity Tester is such a simple device, many hobbyists wouldn't include such an instrument in their circuit-debugging arsenal. They'd rather use their expensive ($200 or more) digital multimeter to make a continuity test, even if they have to wait a second-and-a-half for the meter to display its final verdict. But test results with a dedicated continuity tester are nearly instantaneous. That difference adds up to a huge time savings if you have lots of different tests to make, such as ringing out computer cables, which often have a large number of pins.

Construction. What the Continuity Tester lacks in circuit complexity, it certainly makes up for in enclosure elegance. The Continuity Tester was housed in a plastic coin holder. Because the same scheme is used for the Digital Logic Probe, which will be described shortly, you'll probably want to fashion both enclosures at the same time.

The tip of the probe was fabricated from a standard ¼- × 1¼-inch bolt, the end of which was ground down to a rounded point. Before you actually begin grinding the tip, be sure to run a nut all the way to the head of the bolt. That way, once the grinding is finished, you can back the nut off the bolt to remove any burrs; that also helps to straighten any bent threads. Because of the bolt's taper, once the nut is removed, it can be a challenge to get the nut on again; it can be done but take your time and watch out for cross-threading.

Next, turn your attention to the inside of the enclosure. The prototype was powered from a standard AA-size battery that was placed in a compatible battery holder. But, because an AA cell is pushing the size limit of the enclosure a bit, you may want to down-size your battery to the newer N-cell. Both sizes of batteries, and their associated holders, are available from local as well as mail-order sources.

The only other item that goes inside the enclosure is the indicator lamp. Because there is room for only one battery, the lamp must be one that will work with a 1.5-volt source. Also, as with the battery, the lamp should be small to minimize the required space. (Radio Shack sells a 25-mA miniature lamp—catalog number 272-1139—that is perfect for this application).

As shown in Fig. 2, the Continuity Tester's assembly is very straight-for-

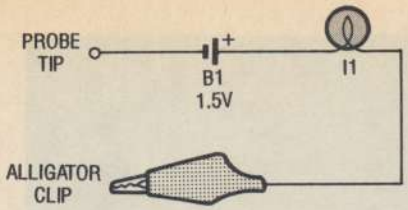

Fig. 1. The Continuity Tester is little more than a battery and a lamp connected in series, with one end of the string terminated in an alligator clip, and the other end connected to the probe tip.

screw (on the outside coin-holder cap), and secure it with a nut. Be sure to apply adequate force when tightening the nut, otherwise the probe may come loose when you attempt to screw the cap onto the body of the coin holder.

One other trick you'll want to use for both of the projects in this article is to form a strain-relief of sorts for the wires that exit the enclosure to prevent too much force from being exerted on a wire's solder joint. The simplest way to provide strain relief is to place a small knot in the wire just before it exits the coin holder, so the knot takes the pulls on the wire and not the solder connection.

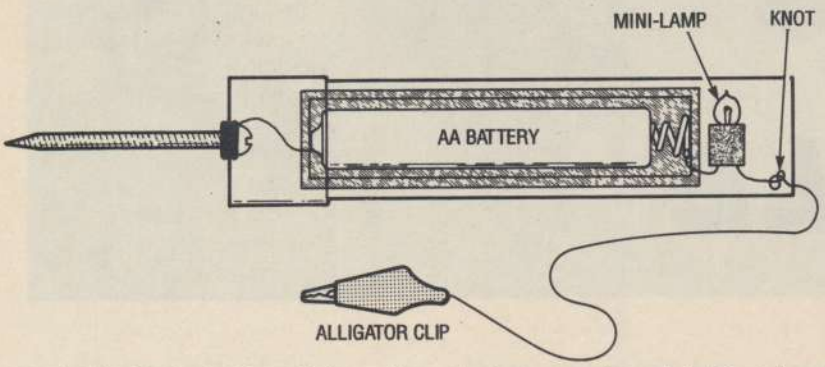

Fig. 2. The Continuity Tester is housed in a plastic quarter-size coin-holder tube.

PARTS LIST FOR THE CONTINUITY TESTER

B1—AA-cell battery
L1—1.5-volt lamp (Radio Shack #272-1139)
Perfboard materials, enclosure (quarter-sized, plastic coin holder) alligator clip, screw, washers, nut, wire, solder, hardware, etc.

PARTS LIST FOR THE DIGITAL LOGIC PROBE

SEMICONDUCTORS

Q1—2N4401 general-purpose NPN silicon transistor
Q2—2N4403 general-purpose PNP silicon transistor
LED1—Red light-emitting diode
LED2—Green light-emitting diode

RESISTORS

(All resistors are ¼-watt, 10% units.)
R1, R2—330-ohm
R3, R4—4700-ohm
R5—100,000-ohm

ADDITIONAL PARTS AND MATERIALS

Printed-circuit materials, enclosure (quarter-sized, plastic coin holder), alligator clips, screw, washers, nut, wire, solder, hardware, etc.

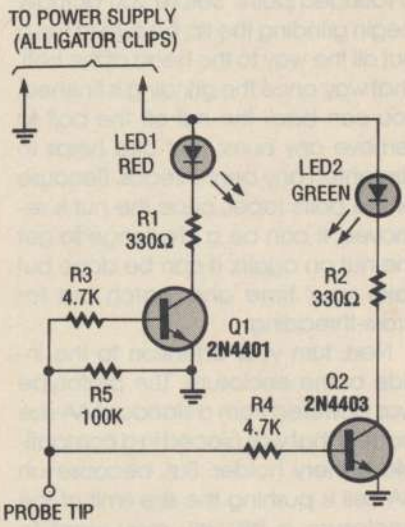

Fig. 3. The design of the Digital Logic Probe centers around a pair of complementary bipolar transistors (as shown in this schematic diagram), which, in this application, are used as electronic switches.

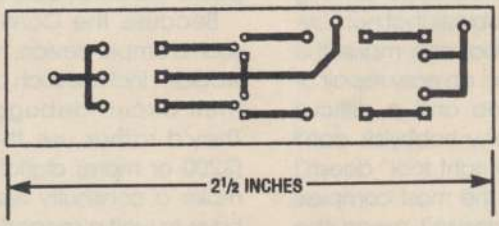

Fig. 4. The author's prototype of the Digital Logic Probe was assembled in a small printed-circuit board, approximately 2½ inches long and ¾ inches wide. A template for that PC layout is shown here full size.

ward. The only tricky part is attaching the probe tip to the capped end of the coin holder. Begin by first soldering a ring terminal on the end of the wire coming from the battery holder. Place the ring terminal in the tapered screw, followed by a washer. Insert the tapered screw through plastic cap of the coin holder (from the inside), and then place another washer on the

Digital Logic Probe. The Digital Logic Probe is intended for use with +5-volt TTL (transistor-transistor-logic) devices, but will also work with most other logic families.

The schematic is shown is Fig. 3. The circuit consists of two complementary bipolar transistors, both of which have their base terminals connected to the logic probe's tip via 4.7k resistors. The transistors then switch power to the two LED's. Based on the state of the pin to which the probe tip is connected, the Logic Probe will light either a green or red LED.

The circuit does not require its own power supply, as its power is provided by the circuit under test via two alligator clips. If you prefer to use a separate +5-volt power supply, be sure when using it to test a circuit that the two supply grounds are tied together, thus ensuring that the probe has an adequate current-return path.

With the power supply leads connect to the circuit under test in the proper manner, when the probe tip is touched to a point in the circuit that is at logic low (0 volts), Q2 (the 2N4403

(Continued on page 94)

Build a

Test Bench Amplifier

Add this handy little amplifier to your troubleshooting/ design-station arsenal

BY LUTHER STROUD

If you experiment with audio circuits or are involved with audio-equipment repair, the *Test Bench Amplifier* discribed in this article may be just what you need. At the heart of the circuit is a high-efficiency, audio power amplifier, coupled with a few support components. The circuit includes options for either or both internal and external power sources.

The Test Bench Amplifier can be used to boost low-level signals enough to drive a speaker, or it can be coupled with an AC voltmeter (with the speaker muted) for adjusting a circuit for peak output. The Test Bench Amplifier can also be used as a high-frequency RF-signal tracer; when used in that capacity, it renders AM signals audible. For experimenters, it can be used as a general-purpose power op-amp with a 300 kHz bandwidth.

About the Circuit. Figure 1 shows a schematic diagram of the Test Bench Amplifier (which is designed as a "building block" to allow it to easily be incorporated into a myriad of other projects). The circuit is built around an LM386 low-voltage, audio power amplifier (U1), which is easy to use, stable, and requires very few support components. The LM386 can deliver up to 0.4 watts with harmonic distortion below 1%. It can be powered from a supply voltage of anywhere from 4 to 12 volts, and has a quiescent current drain of 3 mA, making it ideally suited to battery-powered projects.

The minimum voltage gain of the LM386 is internally set at 20 (26 dB); however, by adding C2 (a 10-µF capacitor connected across pins 1 and 8 of U1, shunting an internal resistor), the voltage gain is increased to 200 (46 dB).

For some applications needing adjustable gain, a 5k potentiometer added in series with C2 will smoothly set the voltage gain between 20–200. Capacitor C1 is used as an audio-input coupler, which provides DC-voltage isolation from the audio source. Potentiometer R3 serves as a volume control and sets the input impedance of the amplifier at 10k. The LM386 has an input impedance of 50k. If your application requires a higher input impedance, select a larger value for R3.

A corresponding value resistor should be inserted in the circuit between U1 pin 2 and ground that reflects the resistance in the U1, pin-3 circuit. It isn't needed if R3 is below 25k. The series circuit of R1 and C5 provide a bit of bass boost to overcome the limited frequency response of small speakers. You may want to shift the values somewhat to tailor the sound to your speaker or leave the parts off altogether. Don't leave off the snubber network of C6 and R2, which keeps the LM386 stable by compensating for the inductance of the speaker. Leaving out that network can result in distorted sound, excessive current drain, and RF interference.

Capacitor C3 provides bypassing of the internal bias network in U1's input-amplifier stage. Capacitor C7 couples the audio signal at U1 pin 5 to the speaker, while providing DC-path isolation. The pin-5 voltage without an audio signal is at ½ the DC supply. Components D1, C8, and R5 form a wideband radio-frequency (RF), amplitude-modulated (AM) detector circuit. Almost any AM signal applied to the project's input when S2 is in the RF (open) position will be converted to an audio signal that can be heard from the speaker. Note that D1 is a germanium diode; a silicon type, such as a 1N914 or similar unit, will not work here.

When S2 is closed, shorting D1, audio signals pass freely. Opening S3 mutes the loudspeaker audio, thus isolating the amplifier so that it can be used alone or with a level-indicating device; SPKR1 can be used as a test speaker since it is isolated from the other circuitry.

Getting It Together. To minimize cir-

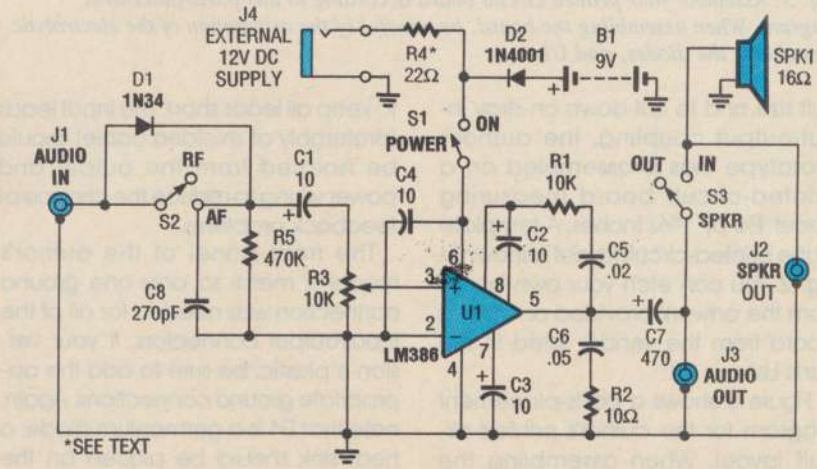

Fig. 1. The Test Bench Amplifier (which is designed as a "building block") is built around an LM386 low-voltage, audio-power amplifier (U1).

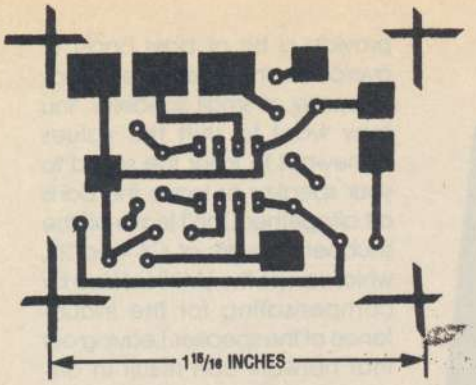

Fig. 2. The author's prototype was assembled on a printed-circuit board, measuring about 1 3/8 by 1 15/16 inches. A template of the printed-circuit layout is shown here.

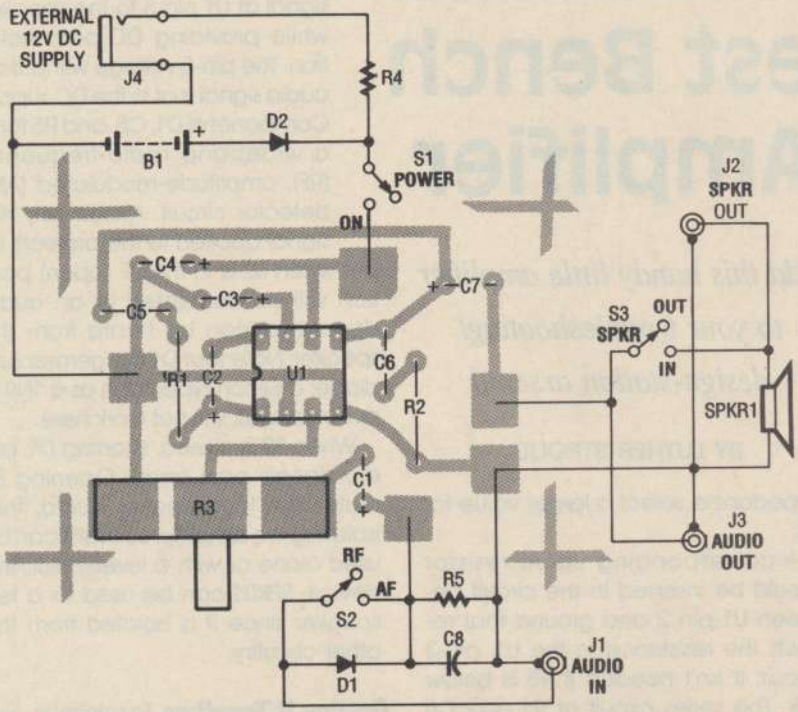

Fig. 3. Assemble your printed circuit board according to this parts-placement diagram. When assembling the board, be mindful of the orientation of the electrolytic capacitors, the diodes, and U1.

cuit size and to cut down on stray input/output coupling, the author's prototype was is assembled on a printed-circuit board measuring about 1 3/8 by 1 15/16 inches. A template of the printed-circuit layout is shown in Fig. 2. You can etch your own board from the artwork provided or order a board from the vendor listed in the Parts List.

Figure 3 shows a parts-placement diagram for the author's printed-circuit layout. When assembling the board, be careful with the polarity of the electrolytic capacitors and orientation of U1. If you follow the board-stuffing sequence of the lowest profile components first (resistors and U1, followed by the capacitors, and finishing with C7 and R3), the assembly will proceed easily.

The terminals of R3 (the large volume-control potentiometer) and the wiring that connects the off-board components to the main chassis are soldered to the oversized pads distributed around the edge of the circuit board. Solder a short wire from ground to the case of R3 to help prevent noise from entering the input circuitry through the body of the control. As you assemble your project, be sure to keep all leads short. The input leads (preferably of shielded cable) should be isolated from the output and power wiring to reduce the chance of feedback problems.

The front panel of the author's model is metal so only one ground connection was needed for all of the input/output connectors. If your version is plastic, be sure to add the appropriate ground connections. Again, note that D1 is a germanium diode; a heat sink should be placed on the diode's leads, about ¼ inch away from the body of the unit, when soldering to avoid possible damage from excessive heat.

A Word on Power. The LM386 consumes very little power at idle, increasing to about 75 mA when driven to full volume. An input signal of about 10 millivolts is sufficient to drive the speaker to full volume. The LM386's low power consumption makes it suitable for battery power.

The internal resistance of the bat-

(Continued on page 98)

PARTS LIST FOR THE TEST BENCH AMPLIFIER

SEMICONDUCTORS

U1—LM386 low-voltage, audio-power amplifier, integrated circuit
D1—1N34 general-purpose germanium signal diode
D2—1N4001 1-amp, 50-PIV, rectifier diode

RESISTORS

(All fixed resistors are ¼-watt, 5% units.)
R1—10,000-ohm
R2—10-ohm
R3—10,000-ohm potentiometer
R4—22-ohm, ½-watt (see text)
R5—470,000-ohm

CAPACITORS

C1–C4—10-µF, 16-WVDC, radial-lead electrolytic
C5—0.02-µF, ceramic-disc or Mylar
C6—0.05-µF, ceramic-disc or Mylar
C7—470-µF, 16-WVDC, radial-lead electrolytic
C8—220-pF, ceramic-disc

ADDITIONAL PARTS AND MATERIALS

S1–SPST—miniature toggle switch
S2, S3—SPDT miniature toggle switch
SPKR1—4-inch, 16-ohm, round speaker
J1–J3—RCA phono jack
J4—Miniature phone jack
Printed-circuit materials, enclosure, battery holder and connector or optional AC adaptor (see text), knob, wire, solder, hardware, etc.

Note: The following is available from Pershing Technical Services, P.O. Box 1951, Fort Worth, Texas 76101: A partial kit of parts, consisting of the printed-circuit board, all board-mounted components, and the battery connector for $9.50. Price includes shipping cost. Texas residents, please add appropriate sales tax.

Popular Electronics

Supplement to Popular Electronics
September 1993

Market Center™

Paperback Books

GREAT PAPERBACKS AT SPECIAL PRICES

☐ COMPUTER HOBBYISTS HANDBOOK—BP251—$8.95

Subjects covered include microprocessors and their register sets; interfacing serial, paralley, monitor, games and MIDI ports; numbering systems, operating systems and computer graphics. While the book is aimed at the computer hobbyist, it should also prove useful to anyone who intends to use a computer to follow their interests.

☐ INTERNATIONAL RADIO STATIONS GUIDE—BP255—$9.95

Provides the casual listener, amateur radio DXer and the professional radio monitor with an essential reference work designed as a guide for the complex radio bands.

Includes coverage on Listening to Short Wave Radio, ITU Country Codes, Worldwide Radio Stations, European Long Wave and Medium Wave Stations, Broadcasts in English and more.

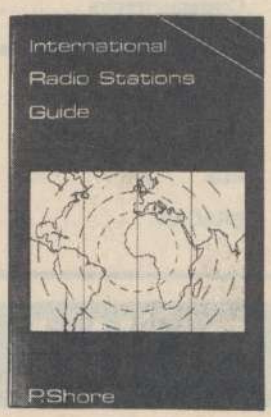

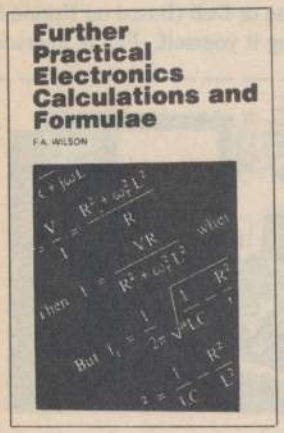

☐ FURTHER PRACTICAL ELECTRONICS CALCULATIONS—BP144—$9.00

450 pages crammed full of all the formulae you are likely to need. Covers Electricity, Electrostatics, Electromagnetism, Complex Numbers, Amplifiers, Signal Generation and Processing, Communications, Statistics, Reliability, Audio, Radio Systems, Transmission Lines, Digital Logic, Power Supplies. Then there's an appendix of Conversion Factors, Mathematical Formulae and more.

☐ WIRELESS & ELECTRICAL CYCLOPEDIA—ETT1—$5.75

A slice of history. This early electronics catalog was issued in 1918. It consists of 176 pages that document the early history of electricity, radio and electronics. It was the "bible" of the electrical experimenter of the period. Take a look at history and see how far we have come. And by the way, don't try to order any of the merchandise shown, it's unlikely that it will be available. And if it is, the prices will be many times higher.

ELECTRONIC TECHNOLOGY TODAY INC.
P.O. Box 240, Massapequa Park, NY 11762-0240

Name _____
Address _____
City _____ State _____ Zip _____

P993

SHIPPING CHARGES IN USA AND CANADA

$0.01 to $5.00	$1.50
$5.01 to $10.00	$2.50
$10.01 to 20.00	$3.50
$20.01 to 30.00	$4.50
$30.01 to 40.00	$5.50
$40.01 to 50.00	$6.50
$50.01 and above	$8.00

SORRY No orders accepted outside of USA & Canada

Number of books ordered ☐

Total price of merchandise ..... $ _____
Shipping (see chart) ..... $ _____
Subtotal ..... $ _____
Sales Tax (NYS only) ..... $ _____
Total Enclosed ... $ _____

All payments must be in U.S. funds

DON'T GET SPIKED BY HIGH CABLE RENTAL FEES!

IT'S TIME TO OWN YOUR CABLE TV DESCRAMBLERS & CONVERTERS

JERROLD, SCIENTIFIC ATLANTA, ZENITH, PIONEER, TOCOM, OAK, HAMLIN, EAGLE

FOR A FREE CATALOG OR QUESTIONS CALL TOLL FREE

1-800-729-1776

30 DAY NO-RISK TRIAL PERIOD

ATKA ELECTRONICS

ONE YEAR WARRANTY IN WRITING

7914 WEST DODGE ROAD #334 OMAHA, NE 68137

CIRCLE 129 ON FREE INFORMATION CARD

ADVERTISERS INDEX

Free Information No.		Page
25	Ace Communications	50E
—	Active Technology	50N
26	Alfa Electronics	50B1
49	All Electronics	50S
27	Alltronics	50M
—	C&C Specialties	50Z
32	C&S Sales	50F
—	Cellular Press	50M
—	Claggk Pulse Stick	50V
—	Communication Specialists	50Z
—	Consumertronics	50N
—	Communication Specialists	50Z
—	Consumertronics	50H
33	Design Computation	50N
—	EDE	50Q
—	ERAC Co.	50X
—	Electronic Tech. Today	50A
—	Great Southern Security	50Q
—	Greenleaf Electronics Inc.	50P
—	H.T. Orr Computer Supplies	50X
35	Index Publishing	50Q
—	Information Unlimited	50J
36	Interactive Image Technologies	50H
—	ITC Microcomponents Inc.	50V
38	Kelvin Electronics	50O
—	Marymac Industries Inc.	50Z
40	MD Electronics	50D
—	Mega Electronics	50V
—	Motron Electronics	50X
—	Movie View Sales	50P
—	MWK Industries	50P
43	Optoelectronics	50K
—	PC Boards	50Z
—	PC Build Computer Kits	50B
—	Phillips Tech	50Q
47	Prairie Digital Inc.	50L
—	Self Reliance Co. Inc.	50M
—	Sil Walker	50X
—	Skyvision Inc.	50Z
—	Software Science	50Q
28	Southpaw Electronics	50C
—	Spy Supply	50T
—	Tele View Distributors	50L
129	TKA Electronics Inc.	50A1
133	Weka Publishing	50W
132	WPT Publications	50Z
134	Xandi Electronics	50L

Build or Upgrade Your PC!

PC-Build specializes in computer kits and components. Our staff of system consultants will work with you to develop the machine you're looking for, at the right price. You can choose one of our standard kits or create your own machine using our custom kit option.

Our kits are 100% compatible PCs that perform as well as (or better than) a comparably configured Compaq or Dell (Based on Norton SI ratings). But you get more than just a fast PC. You go inside the case and learn hardware secrets by doing it yourself. Future upgrades and repairs are a snap -- after all you've built it yourself!

You can't beat our services. We offer:

- A full line of FCC class B approved kits (from 386SX to 486DX)
- 30 day *"You Can Build It"* guarantee
- Our famous step-by-step instruction manual with special sections on Computer Basics and Troubleshooting
- Integrated kit building video
- 1 year warranty on parts
- Top quality components from manufacturers like Seagate, Chinon, and Hewlett Packard
- One of the best technical support hotlines in the business

VESA Local Bus Available NOW!

Call today for more information: **1-800-798-6363**

1993 Discovery Curve, Inc. All brands and product names are trademarks of their respective companies. All rights reserved.

PC-Build
COMPUTER KITS

Discovery Curve, Inc.
85 Franklin Street
Needham, MA 02194
(617) 449-7575 FAX (617) 449-8444

The Leader in "Build It Yourself" Computers

"What gets lost in today's preconfigured buying is the very essence of the computer kit -- understanding what is inside the case and learning how the components all work together.
If you want to teach someone how a computer works and, more importantly, how to build one from scratch, this is one way to learn and get a real working computer in the bargain. The lesson can be invaluable."

Computer Shopper
March 1993

ALFA ELECTRONICS

HIGH QUALITY TEST EQUIPMENT
BEST PRICE

DMM 2360 $129.95

DMM + LCR Meter
Most Versatile DMM

Inductance: 1µH-40H
Capacitance: 1pF-40µF
Frequency: 1Hz - 4MHz
Temperature: -40 - 302 °F
TTL Logic Test: 20MHz
Diode, Continuity
Volt, Amp, Ohm
3999 count display
Peak Hold
Auto power off
Ruggerdized case.
Rubber Holster $8.00

DMM 175A $67.95

DMM with 20 MHz
Frequency Counter
Most Popular DMM

Freq. Counter 1Hz-20MHz
DCV 0.1mV-1000V
ACV 0.1 mV-750V
ACA/DCA 0.1µA-10A
Resistance 0.1Ω-2000MΩ
Capacitance 1pF-20µF
TTL Logic test 20 MHz
Transistor HFE test
Diode test
LED test
3 1/2 digit display
10 MΩ impedance

Fluke Multimeter

Fluke 12	$79.95
Holster C-10	$10
Fluke 70 II	$65
Fluke 73 II	$90
Fluke 75 II	$127
Holster C-70	$15
Fluke 77 II	$147
Fluke 79 II	$167
Fluke 29 II	$167
Fluke 83	$225
Fluke 85	$259
Fluke 87 True RMS	$285
Fluke 86 Automotive	$359

LCR Meter 814 $199.95

The Best Handheld LCR

Inductance: 0.1µH-200H
Capacitance: 0.1pF-20,000µF
Resistance: 1mΩ-20MΩ
1% basic accuracy
Dissipation factor indicates leakage in capacitor and Q factor in inductor
Zero adjustment to reduce parasitics from test fixture
Best for high frequency RF and surface mount components.
SMD and chip component test probe $25.00

LCR Meter 195 $119.95

Very Popular LCR

Inductance: 1µH-200H
Capacitance:0.1pF-200 µF
Resistance:0.01Ω-20MΩ
Basic accuracy:R:1%, C:2%, L:3%
Test frequency 1 kHz

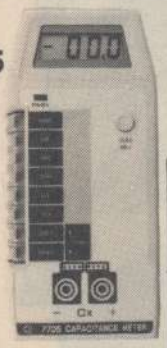

Capacitance Meter 7705 $57.95

0.1 pF-20,000µF in 9 ranges
0.5% basic accuracy
Zero adjustment ± 20pF to compensate parasitics from test fixture

Also Available:
Heavy duty DMM, AC/DC clamp meter, Thermometer, Light meter pH meter,, High voltage probe Digital caliper, Anemometer Elctronic scale, Force guage Tachometer, Humidity & EMF adapter, Sound level meter Frequency counter, SWR/field strength/power meter, Dip meter

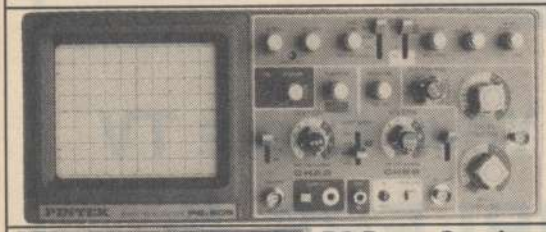

20 MHz Oscilloscope with Delay Sweep PS-205 $429.95

Dual Trace, Component test, 6" CRT, X-Y Operation, TV Sync, Z Modulation, CH2 Output, Graticule Illum, 2 probes each has x1,x10 switch. Best price with delay sweep.

PS-200 20 MHz DUAL TRACE	$339.95
PS-400 40 MHz DUAL TRACE	$494.95
PS-405 40 MHz DELAY	$569.95
PS-605 60 MHz DELAY	$769.95

20 MHz Digital Storage Oscilloscope DS-203 $729.95

Switchable between digital and analog modes
2 K word per channel storage
Sampling rate: 10 M sample /sec
8 bit vertical resolution (25 Lerel/div)
Expanded Timebase 10ms/div - 0.5 s/div
Refresh, Roll, Save all , Save CH2, Pre-Trig
Plotter Control

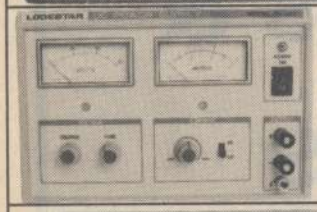

DC Power Supply PS-303 $159.00

0-30 VDC , 0-3A output

0.02% + 2mV line regulation
0.02% + 3mV load regulation
1 mVrms noise and ripple
Short circuit and overload protected
PS-8200 with digital voltmeter $179.00
Also available: 30V/5A, 60V/3A, 60V/5A
16V/10A, 30V/10A

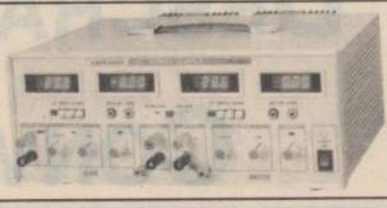

DC Power Supply Triple Output PS-8202 $499.95

Two 0-30 VDC , 0-3A outputs
One fixed 5VDC, 3A ouptput
Capable of independent or tracking operation
Constant voltage and constant current mode
Four digital meters for volt and current display
Excellent regulation and low ripple
Short circuit and overload protected
Also available: 30V/5A triple output
60V/5A dual tracking

RF SIGNAL GENERATOR SG-4160B $119.00

100 kHz-150MHz sinewave in 6 ranges
RF Output 100mVrms to 35 MHz
Internal 1kHz, External 50Hz-20kHz AM modulation
Audio output 1 kHz, 1 Vrms

RF SIGNAL GEN./COUNTER SG-4162 AD $229.95

Generates RF signal same as SG-4160B
Frequency counter 1Hz - 150 MHz for internal and external source
Sensitivity <50mV

AUDIO GENERATOR AG-2601A $119.00

10Hz - 1MHz in 5 ranges
Output: 0-8Vrms sinewave
0-10Vp-p squarewave
Synchronization: ±3% of oscillation frequency per Vrms
Output distortion:
0.05% 500Hz - 50kHz
0.5 % 50Hz - 500kHz
Output impedance: 600 ohm

AUDIO GEN./COUNTER AG-2603AD $229.95

Generates audio signal same as AG-2601A
Frequency counter 1Hz-150MHz for internal and external sources
Sensitivity <50mV

FUNCTION GENERATOR FG-2100A $169.95

0.2 Hz -2 MHz in 7 ranges
Sine, square, triangle, pulse and ramp
Output: 5mV-20Vp-p
1% distortion, DC offset ± 10V
VCF: 0-10V control frequency to 1000:1

FUNCTION GEN/ COUNTER FG-2102AD $229.95

Generates signal same as FG-2100A
Frequency counter 4 digits
Feature TTL and CMOS output

SWEEP FUNCTION GEN./COUNTER $329.95

0.5Hz to 5 MHz in 7 ranges
Sweep: Linear 10:1/Log 10:1 20ms to 2s
AM Modulation
Gated Burst, Voltage Control Generator
Generator Control Voltage & 6 digit counter
1Hz-10MHz for internal & external sources

ALFA ELECTRONICS
P.O. BOX 8089 Princeton, NJ 08543

(800) 526-2532/(609) 275-0220
FAX:(609) 275-9536

15 DAY MONEY BACK GUARANTEE. 1 YEAR WARRANTY
CALL OR WRITE FOR FREE CATALOG AND BEST OFFER.
Visa, Master Card, American Express, COD, Purchase Order Welcome

CIRCLE 26 ON FREE INFORMATION CARD

PRICES YOU CAN'T BEAT!

IMMEDIATE SHIPMENT FROM STOCK • SATISFACTION GUARANTEED

SOUTHPAW ELECTRONICS

Serving The Electronics Industry For Over 50 Years

PLUS FREQUENT BUYER BONUS PLAN!

CAPACITORS

Dipped Solid Tantalum

MFD	VOLT	Price
.22	35	.12 ea.
.47	35	.12 ea.
1.0	35	.18 ea.
2.2	35	.17 ea.
3.3	20	.17 ea.
4.7	35	.24 ea.
6.8	35	.38 ea.
10	16	.28 ea.
10	25	.35 ea.
10	35	.45 ea.
15	16	.25 ea.
22	10	.20 ea.
22	16	.32 ea.
22	25	.45 ea.
33	16	.30 ea.
47	10	.38 ea.
68	6.3	.50 ea.
82	6.3	.50 ea.
100	6.3/10	.75 ea.
150	6.3	1.50 ea.

Minimum 10 Pieces Per Type

Nichicon - Snap-In Lytic

220MFD 160VDC (22x30mm)$.60ea
220MFD 400VDC (25x50mm)$1.50ea
470MFD 200VDC (35x30mm)$1.75ea
10,000MFD 25VDC (30x31mm)$2.25ea

I.C. SOCKETS

Gold Machine Pin

	Each	10/Lot
8 Pin	$ .24	$ 2.00
14 Pin	$ .42	$ 3.50
16 Pin	$ .48	$ 4.00
18 Pin	$ .54	$ 4.50
20 Pin	$ .60	$ 5.00
22 Pin	$ .66	$ 5.50
24 Pin	$ .72	$ 6.00
28 Pin	$ .84	$ 7.20
40 Pin	$1.00	$ 8.50
48 Pin	$1.35	$11.00

115VAC/3 SPEED FAN MOTOR

Mfg: FASCO/USA
RPM 1350/1150/1050
1.25 A, Dual Shaft UL/CSA
Size (w/o shaft) L3"xD3.3"
Shaft size: D .3"x1"L
$4.95ea. 10/$40.00

50 W Zenith Switching POWER SUPPLY

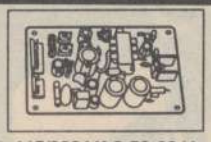

Input: 115/230 VAC 50-60 Hz
Output: 5 VDC @ 3A, +12 VDC @ 2A
-12 VDC .5A
UL/CSA, L 6 1/4" x W 4" x H 2"
Factory New **$14.95 Ea. 10/$125.**

G.E. VOLT-PAC VARIAC

(Variable Transformer)

Input: 120 VAC/60 HZ
Output 0-120 VAC @ 4.0 Amp
Model # 9T92Y, Dial Plate Not Included **$24.95 Ea.**

LED's

Standard Jumbo 5MM or 3MM

Red	$.06 ea.	20 piece
Yellow	$.07 ea.	minimum
Green	$.07 ea.	per item

LED Kit - "Super Value"

All Colors - All Sizes

Kit #100	100 asstd.	$ 4.99/Kit
Kit #500	500 asstd.	$18.00/Kit

Bourns 3/8" Sq Multi-Turn Cermet Sealed Trimpot

25 Turn
#3299P-1-102 1KΩ
#3299P-1-104 100KΩ
$1.50 each

1/4" Sq. S. Turn Cermet Sealed Trimpot

Equal To Bourns #3362-Side Adj.

500Ω
100K
1MEGΩ
10 Pcs. $2.50
No Mixing

COAX CABLE 50Ω TEFLON DIELECTRIC

Type RG178B/U100'-$20/1000'-$145

"HOBBYIST SPECIAL!"

LED Display Assortment

Contains
Half Digit - Single Digit - Dual Digit Units
Common Cathode & Common Anode
Reds & Greens
A Must For Every Hobbyist - Supply Limited!

25 Piece Assortment **$9.95**

PLUG-IN WALL TRANSFORMERS

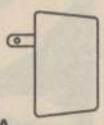

		Each	10/Lot
5.6 VAC @ 200 MA	T.I.	$ .95	$ 8.00
9.0 VDC @ 450 MA	G.E.	$3.25	$30.00
12 VDC @ 100 MA	Pana.	$1.25	$10.00
14 VDC @ 450 MA	G.E.	$2.50	$22.00
14 VDC @ 700 MA	G.E.	$3.25	$30.00
* 18 VAC @ 1.35 A / 28.5 VAC @ 150 MA	T.I.	$4.50	$40.00
18 VAC @ 2.2 AMP	Import	$4.50	$40.00
20 VAC @ 700 MA	Import	$2.75	$25.00

* Table Top Model/2 Secondaries

NI-CAD RECHARGABLE BATTERY PACK

3.6 V 280 Ma/H
Mfg. VARTA
#3A/V28OR
$2.75 Ea., 10/$25.00

SOLDER

Kester 60/40
Rosin Core Solder
1 lb. Rolls
$5.99 each

COOLING FANS

		Each	10/Lot
115 VAC	4.7"	$5.75	$55.00
12 VDC	4.7"	$4.75	$45.00
24 VDC	4.7"	$3.75	$35.00
12 VDC	3.5"	$4.25	$40.00
24 VDC	3.5"	$3.75	$32.00
12 VDC	2.25"	$4.25	$40.00
24VDC	2.25"	$3.75	$32.00
12 VDC	1 5/8"	$4.25	$40.00

AC LINE PROTECTOR

AC Line Protector/Transient Voltage Surge Suppressor
Max. Clamp Voltage: 350V
Mfg. by General Semiconductor
UL, 120 VAC @ 5 AMP
Limited quantity available
$5.75 each

ELECTRICAL TAPE

Black Electrical Tape
3/4" x 60'
PVC, Made In USA
$.75 per roll

Standard G.P. Rectifier

IN4004	1A 400V	$3.00/100
IN4006	1A 800V	$4.00/100
IN4007	1A 1000V	$6.00/100

QUARTZ CRYSTALS HC-18

3.579545	MHz
4.000	MHz
4.434	MHz
10.738635	MHz
17.000	MHz
18.000	MHz
24.000	MHz
36.000	MHz
48.000	MHz

$. 75 Ea.
10/$6.00

ORDER TOLL-FREE 1-800-851-8870

FREE CATALOG & INFORMATION (516) 352-7070 • FAX (516) 775-5091

Minimum Order $25.00 • VISA - MasterCard • Checks & Money Orders On Mail Orders • Open Account Available To Qualified Firms
No COD • NY, NJ, CT Orders Add Sales Tax • Shipping & Handling $4.75 For Continental U.S. - All Others Pay Full Shipping Charges
Prices Subject To Change Without Notice • Quantities Limited On Some Items • Call/Write For FULL-LINE CATALOG & Quantity Pricing

VISA MasterCard

Mail Orders To: SOUTHPAW ELECTRONICS, PO Box 886, New Hyde Park, NY 11040-0311

CIRCLE 28 ON FREE INFORMATION CARD

Are Cable Companies Sucking You Dry?

All Major Brands!

FREE Catalog!

Take a Bite out of High Rental Fees
with your own

Converters & Descramblers

Everquest • Panasonic • Jerrold • Zenith • Pioneer
Scientific Atlanta • Oak • Eagle • Hamlin • Tocom

DISCOVER VISA MasterCard

Order Toll-Free **1 800 624-1150**

MD Electronics

Call today for a FREE catalog!

875 S. 72 Street • Omaha, NE 68114

CIRCLE 40 ON FREE INFORMATION CARD

ACE COMMUNICATIONS
ACE Communications 800-445-7717
10707 East 106th Street Fishers, IN 46038

Get instant tech information FREE from your Fax or Computer!

You can obtain specs, freq. info, software and more from our automated services. For fax facts, call from your stand alone fax machine and follow the voice prompts. Use the BBS from your modem of fax/modem equipped computer. Dial 317-849-8683 for fax back service, or dial 317-579-2045 for our computer bulletin board service

Total Coverage Radios

AOR AR1000XLT
$449.00
AM Broadcast to Microwave
1000 Channels

500KHz to 1300MHz coverage in a programmable hand held. Ten scan banks, ten search banks. Lockout on search and scan. AM plus narrow and broadcast FM. Priority, hold, delay and selectable search increment of 5 to 995 KHz. Permanent memory. 4 AA ni-cads and wall plus cig charger included along with belt clip, case, ant. & earphone. Size: 6 7/8 x 1 3/4 x 2 1/2. Wt 12 oz. Fax fact document # 205

AR2500
$449.00
2016 Channels
1 to 1300MHz
Computer Control

62 Scan Banks, 16 Search Banks, 35 Channels per second. Patented Computer control for logging and spectrum display. AM, NFM, WFM, & BFO for CW/SSB. Priority bank, delay/hold and selectable search increments. Permanent memory. DC or AC with adaptors. Mtng Brkt & Antenna included. Size: 2 1/4H x 5 5/8W x 6 1/2D. Wt. 1lb. Fax fact #305

AR3000
$1195.00
400 Channels
100KHz to 2036MHz

Patented computer control, top rated receiver in its class, offers AM, NFM Wide FM, LSB, USB, CW modes. RS232 control. 4 priority channels. Delay & hold & Freescan. AC/DC pwr cord and whip ant. Size: 3 1/7H x 5 2/5W x 7 7/8D.Wt 2lbs., 10oz. Fax fact document #105

NEW AOR AR1500
$499.00.
Full Coverage with SSB and 1000 Channels.

500KHz to 1300MHz. Ten scan banks, ten search banks. Search lock and store. BFO. 2 Antennas. AM/NFM/WFM. Selectable increments . Tons of features, small size: 5 7/8 x 1 1/2 x 2. Wt 14 oz. Fax fact document # 250

Scanner with Shortwave

NEW

Yupiteru 8-1300MHz Mobile or Hand Held Units. $399.00, each.

Top rated receivers from Japan now available in the USA. Tune down to 100KHz. Sensitivity guaranteed from 8MHz up. 200 scan channels. AM/NFM/WFM. No gaps, no cut-outs. Mobile is super slim line. AC/DC. Order MVT8000, includes antenna, mbl mnt. Order MVT7000 for the hand held. Complete with Ni-Cads, Charger, antenna & earphone. Fax fact document #275

Continuous Coverage

Bearcat 2500XLTA hand held.....$369.00
Bearcat 8500XLTC mobile.....$389.00
Bearcat 890XLTB mobile.....$279.00
29-1300MHz, 500 ch. in 8500, 400 in 2500. 890 has 200 ch.& 29-956MHz. All cell locked. Spring delivery. Fax Fact#420

Mobile Scanners

Bearcat 760XLTM
$249.95
100 Channel
800 MHz

Five banks of 20 channels each. Covers 29-54, 118-174, 406-512 and 806-954MHz (with cell lock). Features scan, search, delay, priority, CTCSS option, lockout, service search, & keylock. Includes AC/DC cords, mounting bracket, BNC antenna. Size: 4 3/8 x 6 15/16 x 1 5/8. Weight: 4.5lbs. Fax fact document #550

Bearcat 560XLTZ
$99.95
16 Channel
10 Band

Compact, digital programmable unit covers 29-54, 136-174, and 406-512MHz. Features scan, WX search, delay, priority, memory backup, lockout, review,& auto delay. Includes AC/DC cords, mounting bracket, and antenna. Size: 7 3/8 x 2 1/2 x 15/8. Wt: 2.5lbs. Fax fact #560

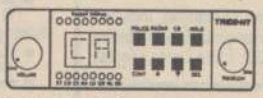

Trident TR-33WL
$399.00
Scan/CB. X,K,Ka,Wide & Laser

Scans police pre-programmed by state channel *plus* full radar and laser alerts in one small unit. Weather, CB receive & mobile relay. Size: 5 5/8 x 4 7/8 x 1 3/4. Wt: 1.5lbs. Fax fact #580

Hand Held Scanners

AOR 900 $249.95
100 Channel 800 MHz

Five scan banks 5 search banks. Covers 27-54, 108-174, 406-512 and 830-950 MHz (no cell lock). Features scan, search, delay, priority, permanent memory, lockout, backlite, & keylock. Includes AC/DC adaptor, belt clip, antennas, & Nicad. Size: 5 3/4H x 2W x 1 1/2D. Wt: 12oz.. Fax fact document #650

Bearcat 200XLTN
$229.95 200 Channels 800 MHz

Ten scan banks plus search. Covers 29-54, 118-174, 406-512 and 806 956MHz (with cell lock). Features scan, search, delay, 10 priorities, mem backup, lockout, WX search, & keylock. Includes NiCad & Chrgr. Size: 1 3/8 x 2 11/16 x 7 1/2. Wt. 32 oz. Fax Facts # 450

Bearcat 100XLTN 100Ch H/L/U..... $159.95
Bearcat 70XLTP 20Ch H/L/U..... $139.95
Bearcat 55XLTR 10 Ch H/L/U..... $ 99.95
Coverage of above hand helds is: 29-54, 136-174, 406-512 except 100 which also adds 118-136 Air Band. Fax facts #475

Table Top Scanners

Bearcat 855XLTE 50Ch w/800..... $159.95
Bearcat 142XLM 10Ch H/L/U..... $ 84.95
Bearcat 147XLJ 16 Ch H/L/U..... $ 89.95
Bearcat 172XM 20Ch H/L/U/Air..... $124.95
Bearcat 210 16Ch H/L/U/Air..... $129.95
Coverage of above units is: 29-54, 136-174, 406-512, plus Air in 172 and 210 and air plus 800MHz in the 855. Fax facts #675

Bearcat 800XLX
$219.95

12 bands and 40 channels with 800MHz and nothing cut out. AC or DC. Fax facts #690

Accessories & Etc.

Mag Mount Mobile Ant MA100..... $ 19.95
Base Ant. 25-1000MHz AS300..... $ 59.95
Pre-Amp .1-1500MHz GW2..... $ 89.00
Downconverter 800 to 400 DC89..... $ 89.00
Base Discone Ant DA300..... $ 89.00
External Speaker MS190/opt. amp.... $ 19.95
Old Scanner Repair, all brands..... $ *CALL*
Extended Warranties..... $ *CALL*
Frequency Info FaxFact/Modem..... $ *FREE*
Frequency Books..... $ *CALL*

2 Way Radios

VHF hi band programmable mobiles as low as $299.95. Call for quotes or Fax Fact #775

Toll Free, 24 Hours! ***800-445-7717*** *Fax Orders* ***800-448-1084*** *Fax Facts* ***317-849-8683***
Computer BBS Modem & Fax/Modem, **317-579-2045**. Toll Free Tech Support, Dial **800-874-3468**
International Fax: en *Espanol, en Francais, und auf Deutsch, or just fax in plain English to:* **317-849-8794**

MasterCard VISA

ACE Communications 10707 East 106th Street, Fishers, IN 46038

Service & Support hours: Mon.-Fri. 9AM to 6PM, Sat. 10-4 EST. Mastercard, Visa, Checks, Approved P.O.'s & COD (add $5.50) & AMEX (add 5%). Prices, specifications and availability subject to change. Flat rate ground shipping and handling charge only $5.95 per unit. Express Air only $8.95 , for most units, to most locations. One week trial, no returns accepted two weeks after original receipt without substantial restocking charge. All units carry full factory warranty. Indiana residents add 5 per cent sales tax.

FLY IT! ONLY $8.95

CIRCLE 25 ON FREE INFORMATION CARD

CALL TOLL FREE
1-800-292-7711
1-800-445-3201 (Can.)

TEST EQUIPMENT
AT DISCOUNT PRICES

48 HOUR SHIPPING

DIGITAL METERS

Dual-Display LCR Meter w/ Stat Functions B+K Model 878
$239.95
Auto / Manual Range
Many Features with Q Factor
High Accuracy

Digital Multimeter w/ Inductance & Capacitance
$75.00
LCM-1850
Ten Functions
by Elenco

Digital Capacitance Meter
CM-1550B
$58.95

9 Ranges
.1pf-20,000ufd
.5% basic accy.
Zero control w/ Case
Big 1" Display
by Elenco

The Survivor
Model 2860
$89
B+Ks Best DMM
Large 3-1/2 Digit
Rugged Construction
Full Featured

Fluke Multimeters

Model 12	$79.95
Model 70II	$65.00
Model 77II	$145.00
Model 79II	$169.00
Model 87	$289.00
Model 93	$1225.00
Model 97	$1795.00

All Models Available - Call

QUALITY AMERICAN MADE POWER SUPPLIES

Digital Triple Power Supply
XP-765
$289

0-20V @ 1A
0-20V @ 1A
5V @ 5A
Fully regulated, Short circuit protected with 2 limit control, 3 separate supplies
XP-660 with Analog Meters $195

12A DC Power Supply
B+K 1686

$169.95
3-14V @ 12A
Fully regulated & protected
Separate Volt & Current Meters
Current Limiting, Low Ripple

Quad Power Supply XP-580

$69.95
2-20V @ 2A
12V @ 1A
5V @ 3A
-5V @ .5A
Fully regulated and short circuit protected

Triple Power Supply XP-620
Assembled $75
Kit $49.95

2 to 15V @ 1A,
-2 to -15V @ 1A
(or 4 to 30V @ 1A)
and 5V @ 3A
All the desired features for doing experiments. Features short circuit protection, all supplies.

GENERATORS & VIDEO PRODUCTS

Function Generator
Blox
#9600
$28.95

Provides sine, triangle, square wave from 1Hz to 1MHz
Kit $26.95
AM or FM capability

Color Convergence Generator
SG-250
$89.95

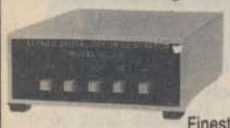

Kit $69.95
Finest in the industry
10 rock steady patterns
RF & Video output

Wide Band Signal Generators
SG-9000

$129
RF Freq 100K-450MHz AM Modulation of 1KHz Variable RF output
SG-9500 w/ Digital Display & 150MHz built-in counter $249

Sweep/Function Generator with Freq. Counter
$259

Model GF-8026
Int/Ext Operation,
Sine, Square, Triangle, Pulse, Ramp, .2 to 2MHz, Freq Counter .1-10MHz

EDUCATIONAL KITS - FUN & EASY TO BUILD

Robotic Arm Kit

Model Y-01 $48.95
Teaches basics of robotics. Arm grabs & releases, lifts & lowers, & pivots from side to side

AM/FM Transistor Radio Kit
with Training Course
Model AM/FM 108
$27.95
14 Transistors ◆ 5 Diodes
Easy to build because schematic is printed right on the PCB
Makes a great school project
Model AM 550 AM Only $17.95

Learn to Build and Program Computers with this kit

Includes: All Parts, Assembly and Lesson Manual
Model MM-8000
$129.00
Starting from scratch you build a complete system. Our Micro-Master trainer teaches you to write into RAMs, ROMs and run a 8085 microprocessor, which uses similar machine language as IBM PC.

Digital Multimeter Kit
with Training Course
Elenco Model M-2665K
$49.95

Fun & Easy to Build
Ideal School Project
Full Function 34 Ranges, Includes Capacitance, Transistor/Diode Testing
20Amp AC/DC, Extra Large Display

Multi-Function Counter
Elenco
F-1200
1.2GHz
$229

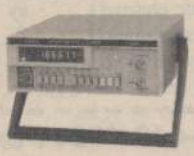

Measures Frequency, Period, Totalizer
8 LED digits, Crysral Oven Oscillator
.5ppm Accuracy

XK-500 Digital / Analog Trainer

A complete mini-lab for building, testing, prototyping analog and digital circuits
Elenco's Digital/Analog Trainer is specially designed for school projects, with 5 built-in power supplies. Includes a function generator with continously variable, sine, triangular, square wave forms. All power supplies are regulated and protected against shorts.

$159.95 Assembled $129.95 Kit

Power Supplies
- Variable Power Supply
- +1.25 to 20VDC @ .5 Amp (+1.25 to 15VDC @ 1 Amp)
- -1.25 to -20VDC @ .5 Amp (-1.25 to -15VDC @ 1 Amp)
- +12VDC @ 1 Amp
- -12VDC @ 1 Amp
- +5VDC @ 1 Amp
- 30VAC Center tapped @ 15VAC at 1 Amp

Analog - Section
- Function Generator Sine, Triangular, Square wave forms
- Frequency adjustable in five ranges from 1 to 100KHz
- Fine frequency adjust
- Amplitude adjust
- DC offset
- Modulation FM-AM

Digital - Section
- Eight data swiches
- Two no bounce logic switches
- 8 LED readouts TTL buffered
- Clock frequency 1 to 100KHz
- Clock amplitude 5VPP square wave

Breadboards
- 2 breadboards, each contain: 840 tie points (total 1,680)

WE WILL NOT BE UNDERSOLD
UPS SHIPPING: 48 STATES 5%
IL RES 7.5% TAX ($3 min $10 max)
OTHERS CALL

C&S SALES INC.
1245 ROSEWOOD, DEERFIELD, IL 60015
FAX: 708-520-0085 • (708) 541-0710

VISA MasterCard

15 DAY MONEY BACK GUARANTEE
FULL FACTORY WARRANTY
WRITE FOR FREE CATALOG
PRICES SUBJECT TO CHANGE

CIRCLE 32 ON FREE INFORMATION CARD

LOWEST PRICES GUARANTEED

ELENCO & HITACHI & B+K SCOPES AT DISCOUNT PRICES

48 HOUR SHIPPING

ELENCO S-1325

25MHz
2 Channel **$349**

S-1340 40MHz Dual Trace Oscilloscope

$495

- High luminance 6" CRT
- 1mV Sensitivity
- 10KV Acceleration Voltage
- 9ns Rise Time
- X-Y Operation

S-1360 60MHz Dual Trace - Delayed Sweep

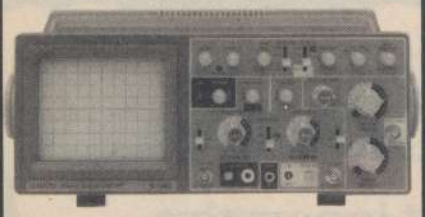

$775

- Automatic Beam Finder
- Built-in Component Tester
- 1mV Sensitivity
- Dual Time Base
- Illuminated Internal Gradicule

DS-203 20MHz, 10MS/s Digital Storage Oscilloscope

$775

- 2K Word Per Channel
- Plotter Output
- 8 Bit Vert. Resolution
- 2048 Pts Hor. Resolution
- Much More

B+K 2120

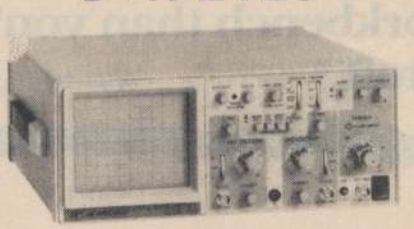

20MHz $395 Model 2125 $539.95
2 Channel Delayed Sweep

40MHz DUAL-TRACE
Model 1541B

749.95

- 1mV/div sensitivity
- Video sync separators
- Z axis input
- Single sweep
- V mode-displays two signals unrelated in frequency

60MHz DUAL-TRACE
Model 2160

949.95

- 1mV/div sensitivity
- Sweep to 5 ns/div
- Dual time base
- Signal delay line
- V mode-displays two signals unrelated in frequency
- Component tester

100MHz THREE-TRACE
Model 2190

1,395.95

- 1mV/division sensitivity
- Sweeps to 2ns/division
- Dual time base
- Calibrated delay time multiplier
- Signal delay line
- 19kV accelerating voltage

20MHz ANALOG WITH DIGITAL STORAGE
Model 2522

869.95

- 20MHz analog bandwidth
- 10MS/s sampling rate
- 2k memory per channel
- 20MHz equivalent time sampling
- Pre-trigger capture

1.0GHz PORTABLE SPECTRUM ANALYZER
Model 2610

2,595.95

- AC/DC operation (battery included)
- 70dB dynamic range

- Resolution bandwidth of 10kHz
- 50Ω and 75Ω input impedance (switch selectable)
- Fixed bandwidth setting for viewing TV signals
- Field calibratible with internally generated 100MHz, 80dB signal

SPECIAL BUY HITACHI V-212

20MHz
2 Channel **$409**

Hitachi Popular Series

V-525 - 50MHz, Cursors	$975
V-523 - 50MHz, Delayed Sweep	$949
V-522 - 50MHz, DC Offset	$849
V-422 - 40MHz, DC Offset	$749
V-222 - 20MHz, DC Offset	$625

Hitachi Compact Series Scopes

V-660 - 60MHz, Dual Trace	$1,095
V-665A - 60MHz,DT, w/cursor	$1,325
V-1060 - 100MHz, Dual Trace	$1,375
V-1065A - 100MHz, DT, w/cursor	$1,649
V-1085 - 100MHz, QT, w/cursor	$1,995
V-1100A - 100MHz, Quad Trace	$2,195
V-1150 - 150MHz, Quad Trace	$2,695

Hitachi RSO Series

RSO's feature; roll mode, averaging, save memory, smoothing, interpolation, pretriggering, cursor measurements.

VC-6023 - 20MHz, 20MS/s	$1,650
VC-6024 - 50MHz, 20MS/s	$1,950
VC-6025A - 50MHz, 20MS/s	$2,350
VC-6045A - 100MHz, 40MS/s	Call
VC-6145 - 100MHz, 100MS/s	Call

Logic Analysers

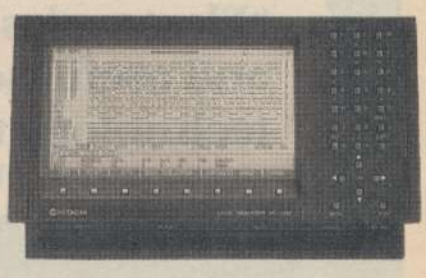

- 32 channels (VC-3120) or 48 channels (VC-3130)
- 25MHz synchronous operation on all channels
- 100MHz asynchronous operation (8 or 12 channels)
- 5ns glitch capture capability
- Multi-level trigger sequencing
- Non-volatile data and set-up memories
- Disassembler options for popular uPs
- Very low cost - Call
- 9 inch LCD screen

C&S SALES INC.
1245 ROSEWOOD, DEERFIELD, IL 60015
FAX: 708-520-0085 • (708) 541-0710

CALL TOLL FREE 1-800-292-7711
1-800-445-3201 (Can)
PROBES INCLUDED IN ALL SCOPES & METERS

15 DAY MONEY BACK GUARANTEE
FULL FACTORY WARRANTY
WRITE FOR FREE CATALOG

CIRCLE 32 ON FREE INFORMATION CARD

"Electronics Workbench is pretty amazing."
– Jerry Pournelle, Ph.D., InfoWorld

"...you can do 10 times as many experiments with Electronics Workbench than you'd get done with the real stuff."
– Jerry Pournelle, Ph.D., Byte Magazine

"...Electronics Workbench is a marvellous learning and teaching tool for the study of electronics."
– Art Salsberg, Editor-in-Chief, ComputerCraft Magazine (formerly Modern Electronics)

"Building a circuit is simple and intuitive."
– Jeff Holtzman, Computer Editor, Radio-Electronics Magazine

"Electronics Workbench is the most innovative and useful software for the teaching of electronics technology that I have ever seen."
– J.W. Roberts, West Georgia Technical Institute, La Grange, Georgia

"It's dynamite!"
– Ian Turner, Manager, Manufacturing Training Center, IBM Canada

CIRCLE 36 ON FREE INFORMATION CARD

Electronics Workbench®

The electronics lab in a computer™

Building and testing circuits is fast and easy with *Electronics Workbench.* Just click-and-drag with a mouse to add parts, run wires, and adjust instruments. The traces on the simulated instruments are the same as you'd get on real equipment.

Electronics Workbench really *is* an electronics lab in a computer. It's ideal for learning about electronics, experimenting, and prototyping circuits.

Includes two independent modules:

- ***Analog Module*** with passive and active components including transistors, diodes, and op-amps; a function generator, an oscilloscope, a multimeter and a Bode plotter.
- ***Digital Module*** with gates, flip-flops, adders, a word generator, a multimeter, a logic analyzer and a unique logic simplifier.

DOS Professional Version – $299
DOS Personal Plus Version – $199
Macintosh Version – $199

Tel: 800-263-5552

Fax (416) 368-5799

Interactive Image Technologies Ltd.

908 Niagara Falls Boulevard,
North Tonawanda,
NY 14120-2060

700 King Street West, Suite 815,
Toronto, Ontario,
Canada M5V 2Y6

Just $299

Call or fax for your copy

Electronics Workbench Professional Version runs on any IBM AT or PS/2 or true compatible with 640 KB RAM; Microsoft-compatible mouse; EGA/VGA graphics; hard disk; MS-DOS 3.0 or later. Personal Plus Version (monochrome only) runs on any IBM PC/XT/AT, PS/2 or true compatible, two floppy drives or a hard disk, 512 KB RAM, Microsoft compatible mouse; CGA/EGA/VGA/Hercules graphics adapter and DOS 3.0 or later. Macintosh Version (monochrome only) runs on Macintosh Plus or greater. All trademarks are the property of their respective owners. Prices are in US dollars. Shipping $15. Offer valid in the USA and Canada only.

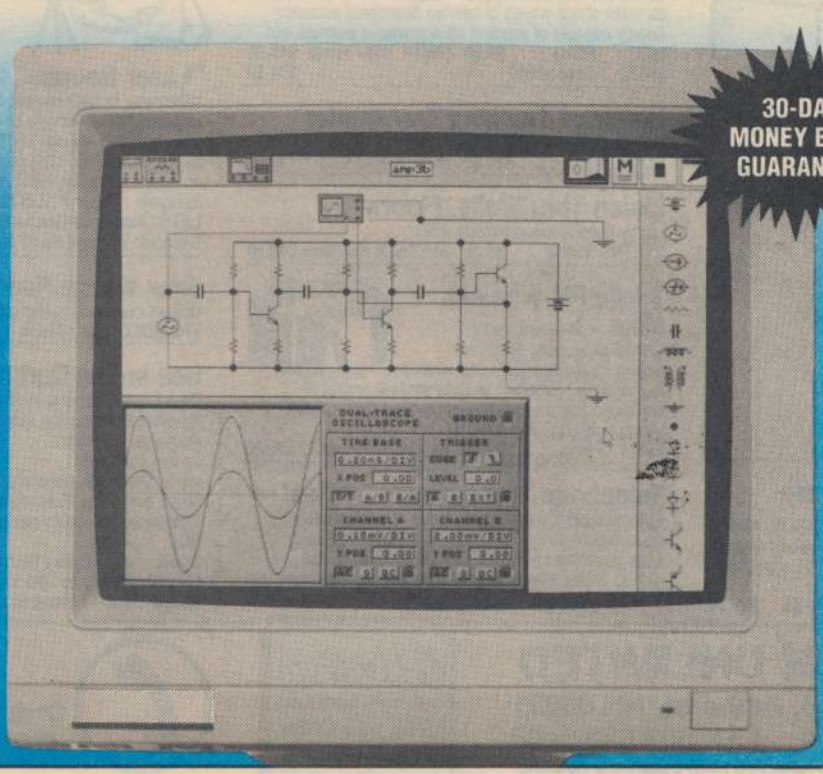

30-DAY MONEY BACK GUARANTEE

INTERACTIVE

CIRCLE 36 ON FREE INFORMATION CARD

AMAZING ELECTRONIC PRODUCTS and KITS

NEW CONCEPT!
Mystery Levitating Device

Remember War of the Worlds? Objects float in air and move to the touch. Defies gravity, amazing gift, conversation piece, magic trick or great science project.
ANT1K Easy to Assemble Kit / Plans $19.50

Combination Solid State Tesla Coil & Variable 100,000VDC Generator

Operates 12-19 VDC for Field Use or 115 VAC For Laboratory Use

Experiments Using Tesla Coil:
- Plasma in a Jar/Tornado, Furnace
- Kirlian Photography
- Wireless Energy Transmission
- Induction Fields
- Pyrotechnic Effects
- Corona and Brush Discharge
- Energizer for Neon Plasma Tubes

Experiments Using Hi Volts DC:
- Plasma Blaster Driller/Cutter
- Anti-Gravity/Force Fields
- Ion Reaction Motors
- Lightning Generation
- High Ion Source
- Ozone For Air Purification
- Electrification of People & Objects
- Particle Accelerators/Atom Smashing
- High Energy Capacity Charging

HVM7 Plans Complete System $15.00
HVM7K Complete System Kit/Plans $174.50
TCL4K Tesla Coil Only Kit/Plans $99.50
115/19AC Wall Adapter for 115AC $15.50

Table Top Tesla Coil

Spectacular -
A Real Attention Getter!
• 250,000 Volts! • 7-10' Sparks! Energy even passes through windows. Great for science projects, displays, advertising.

Highly spectacular devices produces visible, audible bolts of lightning appearing to flash in the air. Causes certain materials to burn from within and glow, lights bulbs without wires, produces induction fields, St Elmo's fire corona. Clearly demonstrates high frequency high voltages yet terminal may be touched by user during operation with a metal object. 115VAC operation only.
BTC3 Plans .. $15.00 BTC3K Kit/Plans $299.50
BTC30 Assembled and Tested $399.50

Shocker Force Field / Vehicle Electrifier
- Neat little device allows you to make hand and shock balls, shock wands and electrify objects, charge capacitors. Great pay back for those wise guys who have wronged you!
SHK1KM Easy To Assemble Electronic Kit . $24.50

High Voltage for the Hobbyist!

Experiment with the forces used in **hover boards, lasers, night vision, mini Tesla coils, plasma globes, magic shows, shock/stun devices, ion ray guns, anti-gravity, pyrotechnics, hypnosis, telekinetics and hundreds more.** Operates from batteries, 9-14 VDC, or 115VAC using adapter.
MINIMAX 4 4,000 Volts, 5ma, 4.5x1.5x1" ... $19.50
MINIMAX 2 2,000 Volts, 5ma, 3.5x7/8" dia .. $14.50

Ultrasonic Blaster
Laboratory source of acoustical shock waves. Blow holes in metal, produce "cold" steam, atomize liquids. Many cleaning uses for PC boards, jewelry, coins, small parts, etc.
ULB1 Plans ..... $10.00 ULB1K Kit/Plans $69.50

100,000V Intimidator / Shock Wand Module
Build an electrical device that is affective up to 20 feet. May be enclosed for handheld, portable field or laboratory applications.
ITM2KM Easy to Assemble Electronic Kit ... $49.50
ITM2 Plans Only; Credit-able to Kit $10.00

Ion Ray Gun
- Projects charged ions that induce shocks in people & objects without any connection! Great science project as well as a **high tech** party prank.
IOG3 Plans ..... $10.00 IOG3K Kit/Plans $69.50

Invisible Pain Field Generator

Shirt pocket size electronic device produces time variant complex shock waves of intense directional acoustic energy capable of warding off aggressive animals, etc.
IPG7 Plans .... $8.00 IPG7K Kit / Plans $49.50
IPG70 Assembled $74.50

Homing / Tracking Transmitter
- Beeper device, 3 mile range.
HOD1 Plans .... $10.00 HOD1K Kit/Plans $49.50

Listen Thru Walls, Floors
Highly sensitive stethoscope mike.
STETH1 Plans ... $8.00 STETH1K Kit/Plans $44.50

3 Mile FM Wireless Mike
- ***Subminiature!***

Crystal clear, ultra-sensitive pickup transmits voices and sounds to FM radio. Excellent security system, warns of intrusion. Become your neighborhood disk jockey! Monitor children and invalids.
FMV1 Plans ..... $7.00 FMV1K Kit/Plans . $39.50

Telephone Transmitter - 3 Miles!
Automatically transmits both sides of a telephone conversation to an FM radio. • Tunable Frequency • Undetectable on Phone • Easy to Build & Use • Up to 3 Mile Range • Only transmits during phone use
VWPM7 Plans .... $7.00 VWPM7K Kit/Plans $39.50

Plasma Fire Saber

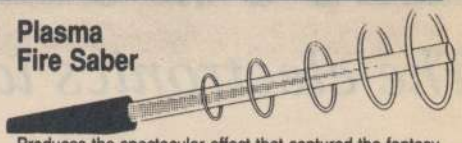

Produces the spectacular effect that captured the fantasy of millions of movie fans. Visible plasma field is controlled by grip pressure and adjusts saber length. Active energy field produces weird & bizarre effects. Excellent for special effects. Specify photon blue, neon red, phasor green, or starfire purple.
PFS2 Plans .... $8.00 PFS2K Kit/Plans $49.50
$special Offer PFS20 Assembled reg $89.50, **$59.50**

TV & FM Joker / Jammer
- Shirt pocket device allows you to totally control and remotely disrupt TV or radio reception. Great gag to play on family or friends. Discretion required.
EJK1KM Easy to Assemble Electronic Kit . $19.50

Visible Beam Laser
High brightness red HeNe laser visible for miles. **Produce your own light show!** Projects a beam or red lite clearly visible in most circumstances. Can be used to intimidate by projection of a red dot on target subject. Also may be used to "listen in" using our laser *window bounce* method #LLIS1 below. **Easy to Build Modules Makes A Working Visible Laser:**
LAS1KM Kit w/1mw Laser Tube, Class II . $69.50
LAS3KM Kit w/2.5mw Laser Tube, Class IIIA $99.50

"Laser Bounce" Listener System
allows you to hear sounds from an area via a lite beam reflected from a window or other similar object. System uses our ready-to-use LATR1 Laser Terminator gun site as the transmitter. The receiver section is supplied as an easy-to-build kit, including our cushioned HS10 headsets. **Order # LLIST20 System, includes our LATR1 Ready-to-Use Laser Gun Site, LLR1K Special Receiver Kit, and HS10 Headset, all for only $299.50**

5mw Visible Red Pocket Laser
Utilizes our touch power control!
VRL3KMX Kit / Plans $119.50

See In The Dark Viewing

Device uses invisible infrared illumination for seeing in total darkness. Excellent for low cost night vision,along with observing lasers and other IR sources. Functional unit, many useful applications.
SD5 Plans $10.00
SD5K Kit / Tube / Plans $299.50
GPV10 Ready to Use Viewer $499.50
6032A Tube / Plans to build your own ... $99.50

INFORMATION UNLIMITED
Dept PEM12, Box 716, Amherst, NH 03031
Phone: 603-673-4730 FAX 603-672-5406
MC, VISA, COD, Checks Accepted. Please Add $5.00 Shipping & Handling

Catalog
with many more items
FREE with Order,
Or Send $1 P&H

Order by Mail, or by 24 Hour Orders-Only Phone:
800-221-1705

TONE READING IMPROVED!!!

DECODE...CTCSS-50, DTMF-16, DCS-105

OPTOELECTRONICS

Monitoring off-the-air signalling tones such as private line and DTMF (Touchtones®) has always involved compromises–tiny displays, ambiguous readouts and poor response time. *No Longer!*

Optoelectronics has applied world class engineering to the problem and set a new standard for inexpensive tone reading equipment. This unit was designed to fill a function, not meet a price—yet it is competitive with other, less featured units. A micro-processor measurement system makes the unit precise and enables future expansion of capabilities.

- Off-the-air reading of CTCSS, DCS and DTMF tones
- Simultaneous indication of DCS/CTCSS and DTMF data
- Scrollable display storage of 127 DTMF digits
- Stores most recent CTCSS or DCS tone
- Convenient front panel controls
- Upgrade older service monitors
- Use with scanner or receiver (may require internal connection for CTCSS)
- Direct connection to Optoelectronics R10 Interceptor
- Ideal for two-way service technicians, hams and monitoring hobbyists
- 2 line by 16 character backlit LCD display
- Low power battery operation optional
- Precise Switched Capacitor audio filtering
- OE10 INSIDE high speed frequency counter ASIC
- Made in USA

DC440 with R10 Package Price $549. Includes DC440, R10 & Cable

SPECIFICATIONS

Function:	CTCSS and DTMF decoding and display
Display:	2 x 16 character LCD dot matrix/EL Backlight
Controls:	Power, Mode, Recall
Inputs:	1/8" Phone jack, greater than 400 kΩ impedance
Output:	Serial Data (I/O)
Power Req.	7 - 15 VDC
Size:	1.8"H x 4.5"W x 4" D
OPTION:	NiCad 44 $39.
PRICE:	**$259.**

Factory Direct Order Line
1-800-327-5912

305-771-2050 • Fax 305-771-2052
5821 NE 14th Ave, Ft. Lauderdale, FL 33334
5% ship/ Handling (Max $10) U.S. & Canada. 15% outside continental U.S.
Visa, Master Card, C.O.D., Cash or Money Order only.

CIRCLE 43 ON FREE INFORMATION CARD

Enter A World Of Excitement with a Subscription to

Popular Electronics

Get the latest electronic technology and information monthly!

Now you can subscribe to the magazine that plugs you into the exciting world of electronics. With every issue of Popular Electronics you'll find a wide variety of electronics projects you can build and enjoy.

Popular Electronics brings you informative new product and literature listings, feature articles on test equipment and tools—all designed to keep you tuned in to the latest developments in electronics. So if you love to build fascinating electronics, just call toll free the number below to subscribe to Popular Electronics . . . It's a power-house of fun for the electronics enthusiast.

Save 55% Off The Regular NEWSSTAND Rate

1 yr $18.95 2 yrs $36.95

Basic Subscription Rate — 1 yr/$21.95; 2 yrs/$42.95

FOR FAST SERVICE CALL TODAY

1-800-827-0383

(7:30 AM-8:30 PM—EASTERN STANDARD TIME)

APEJ3

Tap into a World of...

FREE ELECTRICITY

Our 150+ page ***Self-Reliance Catalog***

IS JUST LOADED WITH DC to AC ENERGY INDEPENDENCE ...

We offer:
Solar, Wind & Hydroelectric energy systems. True Sine Wave DC to AC Inverters. Electric Boat & Car kits. Portable power packs. Solar Lighting & Cooling systems. Solar Pool Heaters. Solar Battery chargers. Solar Books & Toys. DC Appliances. Active & Passive Solar Air & Water Heating Systems. Composting Toilets. Hydroponic, Fish-Farming, Solarium & Greenhouse Systems. Water Testing, Treatment, & Pumping Systems. Emergency Food & h2o Kits. High Efficiency AC/DC Refrigeration + More...

A LOT OF INFORMATION FOR ONLY $ 4.75 ...

SEND CHECK or MO TO:

Self-Reliance Company Inc.

P.O. Box 306, Florissant, Mo. 63032

CELLULAR SOFTWARE

Change ESN and NAM info on these cellular phones:

- MOTOROLA
- MITSUBISHI
- PANASONIC
- NEC

No soldering! Software comes with cabling diagrams to connect your phone to your PC! Only $495.00 for the complete package!

CELLULAR PRESS

421 N. RODEO DRIVE #15318 • BEVERLY HILLS, CA 90210

PHONE: 310-289-2174 FAX on demand: 1-800-438-4511

Call from your fax handset and follow the voice prompts to receive complete technical specifications!

Sold for educational purposes only

TOP SECRET

CONSUMERTRONICS

2011 Crescent Dr., P.O. Drawer 537
Alamogordo, NM 88310

(505) 434-0234, 434-1778

FAX: (505) 434-0234 (if you get answering machine press "#", then "1" any time)

VOICE LINES: 8 AM - 8 PM MST, Mon-Sat
FAX (orders only): 24-hour, 7 days/week

Add $5 total S/H (USA, Canada). All items in stock. COD (UPS cash only), VISA, MCard OK. New Catalog is $2 w/ order, $4 w/o (no free catalog). In business since 1971. As seen on TV, etc. John Williams - former Lockheed Senior Engineer, NMSU Professor of Computer Science, NIH Health Physicist. Educational purposes only.

*All software supports all IBM-PC compatible systems (8086 - 80486)

Off-The-Shelf HARDWARE

Van Eck Systems, Automated Tempest Module, KX Radar Emitter, Carjacking Foiler, Personal Body Alarm, Voice Disguiser, Shriek Module, Hearing Assistor, EM Countermeasure, Omnimax TENS, 6th Sense Communicator, many Nifty Phone Boxes, Bumper Beeper, Subliminal Mixer/Amp, Super MWO, Rife Device, Hieronymus Machine, Neurophone, MU Magnetometer, Dwelling Security System, Levitator, Data Card Reader/Writers, Stealth Paint - much more! See new Catalog.

SPECIAL PROJECTS

We design, build, repair, modify, maintain and-or consult on any device, system, process or project - electrical, electronic, computer, phone, mechanical, optical, automotive. Invention prototyping. Confidentiality guaranteed. Describe and include $25 pre-engineering fee (does not obligate you). Time and cost estimates in 7-10 days.

CELLULAR PHONE MANUAL

How cellular phones are designed, operated, reprogrammed. How cellular systems are vulnerable to hack attacks, and countermeasures. Comprehensively describes modifying NAMs and ESNs (includes specific info. on 30+ popular models), scanning, scanner restorations (includes UHF TV method), freq and channel allocations, roaming, tracking, ECPA - more! $39.

VOICE MAIL HACKING

How Voice Mail Box (VMB) systems are used and the specific ways they are hacked. Includes ASPEN, MESSAGE CENTER, BIX, GENESIS, EZ, SYDNEY, PHONE MAIL, AUDIX, CINDY, CENTAGRAM, SPERRY UNK, RSVP, etc. Absolutely required for all users and sysops! $29

PBX HACKING

Thousands of PBXs are hacked to the tune of about $8 Billion/yr! While our "VOICE MAIL HACKING" details how VMSs are hacked for "phun" and profit - including VMS methods for hacking PBXs themselves - "PBX HACKING" addresses ALL issues relating to PBX hacking, including countermeasures! Can your business or agency afford a $90,000 phone fraud loss (the average loss due to hacked PBXs)? As described in Forbes Megazine. $39

PHONE COLOR BOXES

As designed by Phone Phreaks! 15 phone color boxes described. Dozens of circuits, simulator programs. Plus call-forwarding, conferencing, phreak history, 50 useful and legal phone circuit plans - more. $29.

COMPUTER PHREAKING

TROJAN HORSES, VIRUSES, WORMS, etc. and countermeasures. Includes disk with 360K of hacker text files and utilities, and legendary FLU-SHOT+ protection system (Ed. Choice, PC Magazine). Dozens of computer crime and abuse methods and countermeasures. How systems are penetrated. BBS advice, password defeats, glossary - much more! Manuals + Disks* $39.

BEYOND VAN ECK PHREAKING

Eavesdropping on VDT and TV video signals using an ordinary TV! Documented in security industry literature. Range up to 1 KM. Plans include both the Consumertronics and the original Top Secret Van Eck designs! $29.

CRYPTANALYSIS TECHNIQUES

Five powerful menu-driven crypto programs (in .COM and their .BAS sources) to analyze, decrypt "secure" ciphertexts. Worked-out examples. Recommended in prestigious COMPUTERS & SECURITY. Manual + Disk* $29.

HARD DRIVE MANUAL

Covers all hard drive and controller implementations (emphasis on PCs). How to select, interface, initialize, set up, use, maintain, troubleshoot and repair them. How to protect them from mistakes, sabotage, prying eyes and sticky fingers. How to recover damaged and lost files. How to prevent crashes to begin with. Includes software reviews. Loaded with information, advice, tips. $29. DISK SERVICE MANUAL: Maintain, troubleshoot, repair, adjust, align floppies Without special equipment or software. 3.5"/5.25"/8", PC/XT/AT/386/486, Apple, Commodore, etc systems. All floppies need regular upkeep. $29. DISK DRIVE TUTORIAL: Theory, practical facts on floppy drives, disks, including many tips, recommendations, formatting, interfacing, FDC, etc. $24. Any 2, $49. All 3, $64.

AUTOMATIC TELLER MACHINES

ATM crimes, abuses, vulnerabilities and defeats exposed! 100+ methods detailed, include: Physical, Reg. E, cipher, PIN compromise, card counterfeiting, magnetic stripe, false front, TEMPEST, Van Eck, tapping, spoofing, inside job, super-cool, vibration, pulse, high voltage - others. Case histories, law, countermeasures, detailed security checklist, labeled internal photos, figures. ATMs contain up to $250,000 in cash! Recent $350,000 ATM crime spree still unsolved! $39.

CREDIT CARD SCAMS

Cardholders, merchants and banks suffer $ Billions in losses annually because of credit card fraud. Describes every known means of credit card fraud and scams. Protect yourself! $29.

CONS & SCAMS

Cons & scams fleece Americans of $100+ Billion per year! The most comprehensive survival manual on cons & scams of all kinds - from the classic to the high-tech. Details on 100s and their many variations. Protect yourself! $29.

STOPPING POWER METERS

As reported on CBS "60 MINUTES": How certain devices can slow down - even stop - watthour meters - while loads draw full power! Device simply plugs into one outlet and normal loads into other outlets. Also describes meter creep, overload droop, etc. Plans $29. THE J.G. MANUAL: External magnetic ways (applied to the meter itself) to slow down and stop watthour meters while drawing full loads. Plans. $19. KW-HR METERS: How watthour meters work, calibration, error modes (many), ANSI Standards, etc. Demand and Polyphase Meters. Experimental results to slow and stop meters by others. $19. Any 2, $36. All 3, $52.

HIGH VOLTAGE DEVICES

HV devices plans: Stun Gun, Taser, Prod, Cane, Flasher, Blaster, Zapper, Audio/RF/Radar Jammer, Jacob's Ladder, Plasma & Van de Graaff Gens., Fence Charger, Geiger Counter, Ozone Gen., Fish Stunner, Plant Stim., Kirlian, more! Shocking! $29.

UNDER ATTACK!

Electromagnetic Interference and Electronic Weapon Attacks cause: Cancer, birth defects, and profound psychological, neurological, cardiovascular and immune system disorders! Destructive to people, animals, plants, equipment! Includes ACTUAL CASES OF EM ATTACKS ON PEOPLE (we investigated)! Includes how to verify and pinpoint EMI and electronic attack sources, and specific countermeasures. $29. EM BRAIN-BLASTER: Tutorial and plans for powerful ELECTROMAGNETIC WEAPONS and LAB DEVICES. Optimum circuits, freqs, waveforms, duty cycles, intensities. Thorough.. $29. Both $49.

RADIONICS MANUAL

Exciting electrical, electronic and electromagnetic therapeutic, diagnostic and preventive devices (mostly experimental). History, descriptions, plans (dozens), availabilities of Radionics Devices from early to modern. While drugs cost $ Hundreds, electricity costs pennies! $29. HEAL THYSELF: Plans for 3 major electronic therapeutic devices of types approved by FDA. $19. Both $39.

ROBOFONE AUTODIALER

Powerful, versatile, menu-driven "Wargames" autodialer lets you dial any quantity (up to 10K) or mix of local/long distance numbers in any order, over any length of time, whether busy or answered (your choice) and log the times, commands and results to monitor, printer and-or disk. Quick-dial directory of up to 600 numbers. BUSY redial options. Direct modem command and control. All Result Codes, including VOICE and RINGING. Optional shell to terminal program upon CONNECT. Exit to menu or DOS (for batching). Manual + Disk* $29.

SOFTWARE PROTECTION SYSTEM

Unique system that highly discourages costly software piracy while not interfering with legit archival copies. No known way to defeat. No special equipment required. Simple and automatic to install on your distributed software. Compatible with all other copy-prevention systems. Manual + Disk* $59.

ULTIMATE SUCCESS MANUAL

Underpaid? Harassed or abused? Manipulated? Taken for granted? Stuck in a dead-end job? Can't find a good job? Expect to be laid off, fired or transferred soon? The ultimate no-holds-barred, looking-after-#1 Machiavellian techniques to find, obtain, optimize and keep top jobs, pay and benefits. THE RULES OF THE GAME FOR A GAME WITHOUT RULES! From first resume to CEO. $29.

MUTUAL FUNDS PRO (MFP)

Mutual funds (MFs) are the optimum investment for most people today. However, out of 4,000+ MFs only about 10 are worth serious consideration. Many MFs are poor performers that gouge investors with fees. MFP is the best MF analyzer, tracker and picker program available because it is easy to use (menu-driven), full of options, and uses weighting schemes that more accurately reflect the importance of recent data over long-past stale data. And MFP takes into consideration all fees, let's you compare MF performances against the S&P500 or any specified interest rate (ex: CD), let's you assign an Uninsured Investment Penalty for optimum results, and has powerful sorts. Includes a data file with our pick of the top 100+ performers. Manual + Disk* $39. STOCK-PRO: Unique, powerful, shrewd, unconventional stock investment strategy. Professionally created for NMSU, and core of costly consulting package. Manual + Disk* $29. Both $59.

DC/CAD

introducing...

THE TERMINATOR

Super High Density Router
(Complete with Schematic & PCB EDITOR)

Features the following powerful algorithm & capability:

- Rip - up and Retry
- Pre-routing of SMT components
- Real-Time via minimization
- Real-Time clean up passes
- User defined strategies
- Window 3.0 capability as DOS Task
- 1-mil Autoplacer and Autopanning
- Two-way Gerber and DXF
- Automatic Ground Plane w/ Cross-Hatching
- Complete w/ Schematic & Dolly Libraries
- Optional simulation capability & protected mode for 386 users

Call for DC/CAD – $95
(available for students only)
normal price range
$295 - $2500

* PCB LAYOUT SERVICE AT LOW COST *

LEASE PROGRAM & SITE LICENSE AVAILABLE

Design Computation

1771 State Highway 34
Farmingdale, NJ 07727
(908) 681 - 7700 • (908) 681 - 8733 (FAX)

" DC/CAD . . . The focal point of future CAD market "

CIRCLE 33 ON FREE INFORMATION CARD

ARCO SOLAR PANELS

LOWEST COST PV IN HISTORY

5Amps $240

CARRIZO SOLAR is dismantling the Carrisa Plains, CA PV powerplant. Surplus shoppers know the value of "INDUSTRIAL GRADE" hardware. Used ARCO # M52-L photovoltaic modules are now available at savings of up to 50% vs new PV modules. A "QUADLAM" set is 4 unframed 4V 5 Amodules. Framing is available for $50 /set. **5 year power warranty.** Limited quantites. High quality, durable monocrystaline PV at the lowest prices ever offered. Ideal for RV - cabins - repeaters - emergency power. Here is your opportunity to set up a new system, or beef up an existing one. Satisfaction Guaranteed. Call for brochure / spec sheet.

New SIEMENS M75 $330 — Free Brochure
PV cell GRAB BAGS $15 — Design Guide/Catalog $4
Hobby / Surplus Items — New & Used PV panels

800-366-9316

VISA / MASTERCARD

Active Technology

Active Technology PO Box 1553 Placerville CA 95667

KELVIN ELECTRONICS

10 HUB DRIVE, MELVILLE, NY 11747

(800) 645-9212
(516) 756-1750
(516) 756-1763 FAX

Established 1945
M/C & VISA $20 Minimum Order
KELVIN CATALOG $3
Stock No. 650412

RE-ENGINEERED & DESIGNED FOR 1994

150 LE - Student 200 LE - Technician 400 LE - Engineer

Standard Features - ● AC & DC VOLTAGES ● DC CURRENT ● RESISTANCE ● TRANSISTOR ● CONTINUITY TEST - Buzzer ● DIODE TEST ● 3 1/2 Digit LCD ● 10M ohm INPUT IMPEDANCE

Designed to meet IEC-348 & UL-1244 safety specifications

150 LE	200 LE	400 LE
BATTERY TEST	FREQ COUNTER up to 20MHz	INDUCTANCE Resolution 1uH
DC CURRENT 10 Amp	CAPACITANCE from 1pF to 20uF	FREQ COUNTER up to 20MHz
	AC/DC CURRENT 10 Amp	CAPACITANCE from 1pF to 200uF
		AC/DC CURRENT DUTY % 20 Amp
Stock # 990122	Stock # 990123	Stock # 990124
$29.95	$49.95	$79.95

2 Year Warranty (Parts & Labor)

Popular Electronics Reviewed - May 1993

"Not only does the *Kelvin* 94 boast alot of features ... the features go the extra distance."

"If we had to run into a burning building to do some emergency trouble-shooting and could carry in only one piece of equipment, the *Kelvin* 94 would be it!"

KELVIN 94 *The Ultimate Meter*

LCR | Hz | dBm | True RMS | Logic Probe

The only meter with **0.1% Accuracy** on DC Voltages, built-in **True RMS, Freq Counter to 20MHz** Res: 10 Hz, **LCR-Inductance Tester** Res: 10 uH, **DC/AC Voltages** Res:0.1mV, **Ohm Meter** Res: 0.1 ohms

TRUE RMS PLUS

Model 94
#990111
$199.95
*See Standard Features Listed below

12 INSTRUMENTS IN ONE - **AC & DC VOLTMETERS, AC & DC CURRENT, dBm, OHMMETER, DIODE TESTER, AUDIBLE CONTINUITY TEST, 20 MHz FREQ COUNTER, CAPACITANCE METER, INDUCTANCE METER, LOGIC PROBE**

ENGINE ANALYZER PLUS

Model 95 #990112
$199.95

A Must For Auto Mechanics

Standard Features plus - TEMP, TACHOMETER & DWELL ANGLE TESTER, DUTY CYCLE, 10M OHM IMPEDANCE, ANALOG BAR GRAPH, K-TYPE TEMP PROBE, ALLIGATOR CLIP TEST LEADS, INDUCTIVE PICKUP CLIP, 6' TEST LEADS & DELUXE CARRYING CASE

* ***Standard Features*** - **Models 94 & 95**
- DC/AC VOLTMETERS ● AC/DC CURRENT
- OHM METER ● DATA HOLD ● RELATIVE MODE
- FREQ COUNTER to 4 MHz (Model 95)
- AUDIBLE CONTINUITY TEST ● DIODE TEST
- MAX/MIN AVERAGE MEMORY RECORD
- 10A HIGH-ENERGY FUSE PROTECTION
- AUTO SLEEP & AUTO POWER OFF

KELVIN 100 Basic

990087
$19.95

- AC & DC VOLTAGES
- DC CURRENT
- RESISTANCE
- CONTINUITY TEST-Buzzer
- 3 1/2 Digit LCD
- LOW BATTERY INDICATOR
- DIODE TEST ● BATTERY TEST

INSTRUMENTS

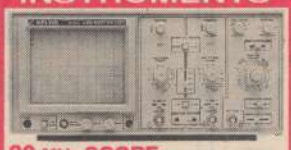

20 MHz SCOPE
Dual Trace 2 Yr Warranty-Parts & Labor
Stock No. 740085 ..... $385

40 MHz SCOPE
Dual Trace with Delayed Sweep
2 Yr Warranty-Parts & Labor
Stock No. 740086 ..... $655

100 MHz SCOPE
3 Channel, 8 Trace with Delayed Sweep
2 Yr Warranty-Parts & Labor
Stock No. 740089 ..... $1,295

2 MHz FUNCTION GENERATOR
Output: SINE, TRIANGLE, SQUARE WAVE, PULSE, RAMP SLEWED SINE WAVE
Stock No. 720098 ..... $199.95

100 MHz MULTIFUNCTION COUNTER
8 DIGIT LED DISPLAY with DECIMAL POINT
Stock No. 720099 ..... $189.95

150 MHz RF SIGNAL GENERATOR
100KHz to 150MHz COVERAGE
450MHz IN HARMONICS, AM MODULATION, INTERNAL OR EXTERNAL, 0 - 100%
Stock No. 720022 ..... $219

DC POWER SUPPLY

CONTINUOUSLY VARIABLE - TWO SEPARATE LED DISPLAYS, GREEN READOUT FOR VOLTAGE & RED READOUT FOR CURRENT
Stock No. 690038 ... 30V @ 3A $295
Stock No. 690039 ... 60V @ 1.5A $295

LOGIC PROBES

MEASURES TTL, DTL, RTL, CMOS

Stock No.	Model	YOUR COST
740071	LP10A - 17 MHz	$19.95
740087	LP25A - 25 MHz	$39.95
740088	LP50A - 50 MHz	$49.95

LOGIC PULSER
SWITCHABLE 0.5/400 PULSE RATE, 100mA

Stock No.	Model	YOUR COST
740073	PR41	$49.95

TEST ACCESSORIES

SCOPE PROBES
60 MHz, X1 & X10 SPECIAL
700072 .... $18.95
150 MHz, X10
700073 ..... $39.95

IC CLIPS
SOLDER TYPE SPRING LOADED

Stock No.	COLOR	COST	25+ Qty
990104	BLACK	$.65 ea.	$.50 ea
990105	RED	$.65 ea.	$.50 ea

DC TOY MOTORS

DC Toy Motor - Stock No. 850647
$.80 ea
$.75 ea / 50+ Qty 6V DC High Speed

Solar Motor Stock No. 850646
$.60 ea 1.5V DC
$.55 ea / 50+ Qty

Solar Cells
Stock No. 260099
$5.95 ea 3 3/4" L x 2 9/16" W
$5.50 ea / 3+ Qty 1000mA .45V

DIGITAL TRAINER

Laptop Digital Trainer comes with 100 page instruction manual, power supply, built-in 1 digit true hexadecimel display, two independent clocks with user adjustable freq & duty cycles, 4 data bit switches and 4 LED displays. ***Assembled***
Stock No. 840460 ..... $99.95

BINARY QUARTZ CLOCK w/Alarm

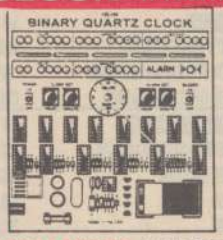

ORIGINAL DESIGN - 24 Hr. Binary Quartz Accurate Clock with 2 color LED's. Built-in **Alarm** and **Alarm Display** in binary code. **DESIGNED FOR LEARNING** *about digital circuitry & binary code.* Built with individual IC components. **Battery Memory Loss Prevention.** *Comes with rechargeable battery, DC wall transformer and* detailed instruction manual. **Advanced Level Kit**
Stock No. 840589 ..... $89.95

Electronic VOICE PAD

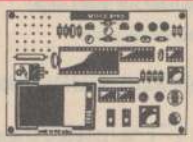

An electronic note pad, able to record your message & replay it later. It has a built-in photo cell & as soon as it senses your presence, it will automatically playback the message left for you. The components are PC mounted. The IC can record a message up to 20 seconds & no mechanical parts or tape - only a digital integrated circuit.
Intermediate Level Kit
Stock No. 840606 ..... $49.95

BREADBOARDS

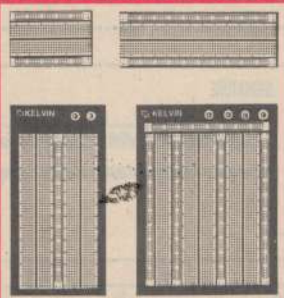

Stock No.	Post	Contacts	YOUR COST
680093	0	500	$ 4.25
680097	0	840	$ 5.95
680098	2	1380	$11.75
680100	4	2390	$22.95

WIRE JUMPER KIT
Pre-cut, Pre-Stripped
330289 140 Piece Set ..... $ 4.95
330290 350 Piece Set ..... $ 8.95

COMPONENTS

WHOLESALE PRICES!

Stock No.	TYPE	(10 Pc. Min.) YOUR COST
600021	555 TIMER	$.20 ea
600029	556 DUAL TIMER	$.40 ea
600039	LM566 PPL FUNCTIONGENERATOR	$.60 ea
600018	741C OP-AMP INTERNALLY COMPENSATED	$.30 ea
600026	1458 OP-AMP DUAL 741C OP-AMP	$.35 ea
630041	2N2222	$.20 ea
630383	PN2222	$.08 ea
600023	7805 Voltage Reg	$.36 ea

SILICON CONTROLLED RECTIFIER
(Similar to GE C106C1) 4.0 amp, 100PIV
600014 ..... $.89 ea ..... $.79 ea/10+

THERMISTER - 100 ohm
110097 ..... $1.35 ea ..... $1.00 ea/20+

THERMISTER - 10K ohm
110097 ..... $1.35 ea ..... $1.00 ea/20+

PROJECT PARTS

Project Speaker
2", 8 Ohm, .1 Watt
Stock No. 350009
59 ¢

Project BUZZER
3 - 9 Volt DC, 80 db
Stock No. 680089
$1.59 ea
$1.39 ea / 10+ Qty

Soldering IRON
with STAND
LONG LIFE TIP
Stock No. 990098
$3.95 ea

LED T 1 3/4

Stock No.	Color	100+ Qty	1000+ Qty
260020	RED	$.05 ea	$.045 ea
260027	GREEN	$.08 ea	$.07 ea
260026	YELLOW	$.08 ea	$.07 ea
260078	2 COLOR RED/GREEN	$.32 ea	$.29 ea

XENON STROBE TUBE
Stock No. 260050
$2.95 ea
$2.50 ea / 20+ Qty

TRIGGER COIL
for Xenon Strobe Tube
Stock No. 320037
$1.25 ea
$ .89 ea / 20+ Qty

INFRARED LED
IR Pair, LED Infrared transmitter and receiver
Stock No. 260061
$1.95 ea

NEON LAMP
NE2, 2" Lead
Stock No. 260003
$.15 ea
$ .12 ea / 100+ Qty

PHOTO CELL
Photo Cell - 450 ohm
Stock No. 260017
$.65 ea $.45 ea /20+ Qty
Photo Cell - 1.5K ohm
Stock No. 260018
$.65 ea $.45 ea /20+ Qty

PUSH-BUTTON SWITCH
PUSH-ON, PUSH-OFF
Stock No. 270021
$.55 ea
$ .49 ea / 100+ Qty

SUB-MINIATURE MOMENTARY SWITCH
Stock No. 990002
$.35 ea
$ .28 ea / 100+ Qty

MINIATURE TOGGLE SWITCH
Stock No. 270034
$.90 ea Type - SPST
$ .79 ea / 50+ Qty

CIRCLE 38 ON FREE INFORMATION CARD

MIKE NELSON'S MOVIE VIEW SALES, INC.

WHERE YOU'RE TREATED POLITE AND GIVEN INDIVIDUALIZED ATTENTION!

INFO (708) 250-8690/FAX (708) 250-8755

P.O BOX 26 • WOOD DALE, IL 60191

Call C.S.T. Monday thru Friday 9:00 - 6:00 • Sat. 10:00 - 2:00

Friendly Courteous Service • 12 Yrs. Experience • 6 Mo. Warranty

JERROLD	1-3	4 or more
NEW TRI/BI COMBO (FTB)	130.00	125.00
NEW TRI/BI PAN	75.00	60.00
NEW SB-3 COMBO	115.00	110.00
NEW SB-3 PAN	60.00	55.00
DPV-7212	CALL	MIKE
DPBB-7212	CALL	MIKE
CAMOUFLAGE TRI/MODE	85.00	79.00
NEW FTB-2	75.00	60.00
NEW SB-2	60.00	55.00
HAMLIN	**1-3**	**4 or more**
NEW HAMLIN COMBO(CH 2 OR 3)	110.00	105.00
NEW HAMLIN MLD-1200	50.00	45.00
MLD-1200-2	50.00	45.00

Price effective 1/1/93 (Subject to change without notice)

PIONEER	1-3	4 or more
*NEW SA-PIO-COMBO	155.00	150.00
NEW SA-PIO-PAN W/SWITCH	80.00	75.00
NEW ORIG. BA-6100 PAN	CALL	MIKE
SCIENTIFIC ATLANTA	**1-3**	**4 or more**
*NEW SA-3 COMBO (SA-3B)	130.00	125.00
NEW SA-3 PAN	75.00	60.00
8550:	175.00	165.00
8580:	250.00	CALL
8536:	210.00	205.00
OAK	**1-3**	**4 or more**
NEW OAK N-12 COMBO(Vari Sync)	130.00	125.00
NEW OAK N-12 PAN(Vari Sync)	75.00	60.00
M-35-B	50.00	45.00
PANASONIC-VIEWSTAR	**20 LOT**	**100 LOT**
	75.00	CALL
ZENITH: Z-TAK	220.00	CALL
NOTCH FILTERS	16.00	12.00

* All Combos come with new Panasonic or Viewstar converter.

(Parental lockout units: No extra charge.)

Volume control units available

MOST ORDERS SHIPPED SAME DAY!

QTY.	ITEM	PRICE EA.	TOTAL PRICE

SUB TOTAL

SHIPPING Add $4.00 per unit

$4.50 PER COD TAG/CREDIT CARDS Add 5%

TOTAL

(WAIVER) - MUST BE SIGNED FOR OUR RECORD

☐ Yes, I am paying for full service. This is only to be used as a second unit.

DECLARATION OF AUTHORIZED USE - I, the undersigned, do hereby declare, under penalties of perjury, that all products purchased, now and in the future, will only be used on cable TV systems with proper authorization from local officials or cable company officials in accordance with all applicable federal and state laws. FEDERAL AND VARIOUS STATE LAWS PROVIDE FOR SUBSTANTIAL CRIMINAL AND CIVIL PENALTIES FOR UNAUTHORIZED USE.

ABSOLUTELY NO ILLINOIS SALES

SIGNATURE

X_____

It is not the intent of MOVIE VIEW to defraud any television operator and we will not assist any company or individual in doing the same.

VISA-MASTER ☐ C.O.D. ☐

CASHIER'S CHECK ☐ MONEY ORDER ☐

ORDERS ONLY: 1-800 735-5912

Card #_____ Exp. Date_____

Name_____

Address_____

City_____ State_____ Zip_____

Phone ( )_____

If for any reason you are not satisfied with any item purchased, you may return it within 30 days of delivery for a full refund.

Greenleaf ELECTRONICS

CABLE TV

Converters & Descramblers

Compatible with

Jerrold, Scientific Atlanta, Pioneer, Oak, & Hamlin

Equipment

BRAND NEW!

90-DAY GUARANTEE

LOWEST PRICES

Volume Control & Parental Lockout Available

Greenleaf Electronics

1-800-742-2567

NO ILLINOIS SALES

It is not the intent of Greenleaf Electronics to defraud any pay television operator and we will not assist any company or individual in doing the same.

LASERS

HELIUM NEON FROM $19
ARGON * BOOKS
CO^2 * PLANS
OPTICS * LIGHTSHOWS
LASER DIODES
LASER POWER SUPPLIES

LASER USES:
HOLOGRAPHY * LIGHTSHOWS
PRINTING * COMMUNICATION
WEAPON SIGHTS * ALIGNMENT
ALARMS * POINTERS
CUTTING * CONSTRUCTION

FREE CATALOG 1-909-278-0563

MWK INDUSTRIES

VISA C.O.D.

198 LEWIS COURT
CORONA, CA 91720

CIRCLE 40 ON FREE INFORMATION CARD

EXACTLY WHAT YOU *MUST* KNOW ABOUT PIRACY OF SATELLITE AND CABLE PROGRAMS

• DESCRAMBLING • "TEST CHIPS" • THE LAW
• SUPPLIERS OF DESCRAMBLERS, PARTS, SERVICES
• THE CUSTOMERS • THE DEALERS • THE RISKS
ENFORCEMENT & COUNTERMEASURES

...this NEW, authoritative, comprehensive, illustrated book even covers videotape and Nintendo™!

The ELECTRONIC UNDERGROUND SERIES, Vol 2

The TELEVISION GRAY MARKET
by Henry L. Eisenson
160 PAGES, ILLUSTRATED
$23.75 postpaid
Visa/MCard/AmEx

1-800-546-6707
INDEX PUBLISHING GROUP
or Check, MO
3368 Governor Drive, Suite 273F
San Diego, CA 92122

CIRCLE 35 ON FREE INFORMATION CARD

PE MARKET CENTER CLASSIFIEDS

MISCELLANEOUS ELECTRONICS FOR SALE

GOVERNMENT SURPLUS test equipment and parts. Free catalog. EF Electronics, Box 326, Aurora, IL 60507.

DESCRAMBLING SECRETS REVEALED. FREE 24 hour hotline reveals secret satellite and cable descrambling information. (718) 390-7130.

ELECTROMAGNETIC FIELD METER. Protect yourself — protect your family. Studies have shown a link between **EMF's** and **CANCER.** Find your "safe" area. $19.95 +$3.00 S&H. **ELECTROMAN,** Dept. PE, Box 24474, New Orleans, LA 70184. (504) 482-3017.

Quality Microwave TV Antennas

WIRELESS CABLE - IFTS - MMDS - Amateur TV
Ultra High Gain 50db(+) • Tuneable 1.9 to 2.7 Ghz.
• 55-Channel Dish System $199.95
• 36-Channel Dish System $149.95
• 20-Channel Dish System $124.95
• Optional Commercial Grid Antenna (not shown) Add $50.00
• Yagi Antennas, Components, Custom Tuning Available
• Call or write (SASE) for "FREE" Catalog

Dish System
LIFETIME WARRANTY

PHILLIPS-TECH ELECTRONICS
P.O. Box 8533 • Scottsdale, AZ 85252
(602) 947-7700 ($3.00 Credit all phone orders)
MasterCard • Visa • American Express • COD's • Quantity Pricing

ANTIQUE ELECTRONICS

RADIO TUBES, capacitors, etc. 16 page illustrated catalog $2.00 (foreign $3.00). Don Diers, 4276 North 50th Street #MC5, Milwaukee, WI 53216-1313.

BUSINESS OPPORTUNITIES

MAKE MONEY with your camcorder. Send SASE. Girard Video Services, 5803 Turtlecreek, Fairfield, OH 45014.

HOME BUSINESS only $25.00, money-back guarantee! BJW, Suite 274-PE2, 879 W. Park Ave., Ocean, NJ 07712.

Prototype it..... *FAST!*

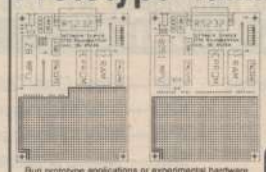

with ProtoQuick 8051 or Z8
- Complete single board computers
- Up to 32K EPROM and 8K RAM
- 12 sq. in. plated-through proto area
- RS232 C serial port w/ DB25 conn.
- Op. sys. in EPROM w/ source code
- Assembled, ready to run - 5v only
- MS-DOS cross assembler included

ProtoQuick Z8 and 8051
$99.00 each

Run prototype applications or experimental hardware from the serial port - WITHOUT PROGRAMMING!

Software Science
Software Science
3750 Roundbottom Road
Cincinnati, OH 45244 USA
(513) 561-2060

PLANS-KITS-SCHEMATICS

BUILD — FIVE-digit, ohms, capacitance, frequency, pulse, multimeter. Board and instructions $9.95. Bagnall Electronics, 179 May, Fairfield, CT 06430.

FREE PLANS. For cable and satellite descramblers. Complete information package. MJMC, Box 531, Bronx, NY 10461.

FM STEREO TRANSMITTER kit broadcasts any audio signal to FM stereo radios throughout your home. Uses unique BA1404 IC. Complete kit: PC board/components — $24.00. Visa/MC. **TENTRONIX,** 3605 Broken Arrow, Coeur d'Alene, ID 83814. (208) 664-2312.

ALL-IN-ONE catalog. AM/FM/ham/spy, transmitters/amplifiers, voice disguisers, descramblers, audio/TV/science projects. Start your own licensed/unlicensed radio station, books/plans/kits for import and export. 60 mouth-watering pages for $1.00. **PAN-COM INTERNATIONAL,** PO Box 130-H9, Paradise, CA 95967.

BUGGED??

EAVESDROPPING is unbelievably widespread! Electronic Devices with amazing capabilities can be monitoring your telephone and room conversations RIGHT NOW! Are you sure you're safe? FREE CATALOG tells you fast! Includes Free Bonus details on fantastic opportunities now open in Counter-Surveillance field. Exciting, immensely interesting and EXTREMELY profitable (up to $250 hr) full/part-time income. Call Now! 1-800-732-5000

ASSEMBLY LANGUAGE BASICS for the 8051. A beginners guide to the world of .ASM programming. This 60+ page booklet contains detailed instructions and working programs. Includes 8051 initialization codes, I/O, serial port and LCD Module programming. Also includes schematics and programs to build; Telephone Dialer, LCD Dialing Displays and MORE. Only $16.00 (includes 360K .ASM program disk) Suncoast Technologies, PO Box 5835PE, Spring Hill, FL 34606.

LONGWAVE PRODUCTS and kits. Send SASE for free catalog. **CURRY COMMUNICATIONS,** 737 N. Fairview St., Burbank, CA 91505.

DESCRAMBLER BUILT right into your TV. Complete plans and instructions. Send $15.00 to Berger Enterprises, Route 6, Box 209T, Murphy, NC 28906.

SURVEILLANCE
& COUNTER SURVEILLANCE Electronic Devices
Transmitter Kits.. $39.95 ppd., Voice Changers, Telephone Recording Systems, Vehicle Tracking, Bug & Phone Tap Detector & More!
NEW! *Telephone* PRIVACY PLUS- *defeats bugging devices and automatic tape recorders on your line.* $199.00
FOR CATALOG SEND $5.00 TO...
EDE P.O. Box 337, Buffalo, NY 14226 (716) 691-3476

COMPONENTS

LOOKING FOR PARTS. We will find anything. Send $3.00. BB Research, 4 Croydon Court, Englishtown, NJ 07726.

REPAIRS-SERVICES

SCANNER! HAM radio repair! Fast turn around, estimates gladly given. Dan Rupe (Telo Technology), 1302 Uplands Drive, Camano, WA 98292. (206) 387-3558.

PROFESSIONAL COMPUTER drawn schematics from your sketches. For more information call Klaus Spies at (708) 966-4835.

USE PE MARKET CENTER CLASSIFIEDS

READ BY 87,877 BUYERS OF ELECTRONIC EQUIPMENT ACCESSORIES AND PARTS

INSTRUCTION FOR PLACING YOUR AD!

HOW TO WRITE YOUR AD

TYPE or PRINT your classified ad copy CLEARLY (not in all capitals) using the form below. If you wish to place more than one ad, use a separate sheet for the additional ads (a photocopy of this form works well). Choose a category from the list below and write that category number into the space at the top of the order form. If you do not specify a category, we will place your ad under Miscellaneous or whatever section we deem most appropriate.

We cannot bill for classified ads. Payment in full must accompany your order. We do permit repeat ad or multiple ads in the same issue, but in all cases, full payment must accompany your order.

WHAT WE DO

The first two words of each ad are set in bold caps at no extra charge. No special positioning, centering, dots, extra space, etc. can be accommodated.

RATES

Our classified ad rate is $1.00per word. Minimum charge is $15.00 per ad per insertion (15 words). Any words that you want set in bold or caps are 20¢ each extra. Bold caps are 40¢ each extra. Indicate bold words by underlining. Words normally written in all caps and accepted abbreviations are not charged as all-caps words. State abbreviations must be Post Office 2-letter abbreviations. A phone number is one word.

CONTENT

All classified advertising in the **PE Market Center** is limited to electronics items only. All ads are subject to the publisher's approval. We reserve the right to reject or edit all ads.

DEADLINES

Ads received by our closing date will run in the next issue. For example, ads received by April 14 will appear in the August, 1991 issue that is on sale June 18. The PE Market Center is published monthly. No cancellations permitted after the closing date. No copy changes can be made after we have typeset your ad. NO REFUNDS, advertising credit only. No phone orders.

AD RATES: $1.00 per word, Minimum $15.00.

Send your ads with payment to:
Popular Electronics Market Center, 500-B Bi-County Blvd. Farmingdale, NY 11735

CATEGORIES

100 — Antique Electronics
130 — Audio-Video-Lasers
160 — Business Opportunities
190 — Cable TV
210 — CB-Scanners
240 — Components
270 — Computer Equipment Wanted
300 — Computer Hardware
330 — Computer Software
360 — Education
390 — FAX
420 — Ham Gear For Sale
450 — Ham Gear Wanted
480 — Miscellaneous Electronics For Sale
510 — Miscellaneous Electronics Wanted
540 — Music & Accessories
570 — Plans-Kits-Schematics
600 — Publications
630 — Repairs-Services
660 — Satellite Equipment
690 — Security
710 — Telephone
720 — Test Equipment

CLASSIFIED AD COPY ORDER FORM

Ad No. 1—Place this ad in Category # _____

1 - $15.00	2 - $15.00	3 - $15.00	4 - $15.00
5 - $15.00	6 - $15.00	7 - $15.00	8 - $15.00
9 - $15.00	10 - $15.00	11 - $15.00	12 - $15.00
13 - $15.00	14 - $15.00	15 - $15.00	16 - $16.00
17 - $17.00	18 - $18.00	19 - $19.00	20 - $20.00
21 - $21.00	22 - $22.00	23 - $23.00	24 - $24.00
25 - $25.00	26 - $26.00	27 - $27.00	28 - $28.00

29 - $29.00	30 - $30.00	31 - $31.00	32 - $32.00
33 - $33.00	34 - $34.00	35 - $35.00	36 - $36.00
37 - $37.00	38 - $38.00	39 - $39.00	40 - $40.00

Ad No 1—Total words _____ × $1.00 per word = $ _____

All Caps words _____ × .20 per word = $ _____

Bold words _____ × .20 per word = $ _____

Bold Cap words _____ × .40 per word = $ _____

TOTAL COST OF AD No. 1 $ _____

Total classified ad Payment $ _____ enclosed.

[ ] Check [ ] MasterCharge [ ] Visa ($15.00 minimum credit card order)

Card # _ _ _ _ _ _ _ _ _ _ _ _ _ _ _ _

Expiration Date _ _ / _ _

Signature _____

Name _____ Phone _____

Address _____ City State Zip _____

QUALITY PARTS • DISCOUNT PRICES • FAST SHIPPING

ALL ELECTRONICS CORP.

TELEVISION SOUND ENHANCEMENT KIT

Televonic Sound Systems # 2001
Now your TV can sound as great as your stereo system.
The Televonic Model # 2001, when properly installed in your television set, will produce two separate high-fidelity channels which can be run through your home stereo. By using the controls on your stereo, you can vary volume and tone of your TV. Music videos, movie sound tracks and sports programs will come alive with fantastic new sound. THIS UNIT REQUIRES SOME TECHNICAL SKILL TO INSTALL: In order to install it you need to remove the back of your TV and make solder connections to your speaker wire, to your 115Vac input and to a pair of RCA jacks which are included in the kit and need to be installed in the back cover of the set. Instructions and cables included. **CAT # TV-2001** $ 4.00 each

SOLID STATE DIP RELAY

International Rectifier # DP61K "Chipswitch" SPST normally open solid state relay in DIP configuration. AC Load: 300 ma., 20-280 Vac DC Input (turn on): 5 to 25 ma. The DC input can be any voltage as long as the current is maintained between 5 and 25ma. Use a dropping resistor to do this. LARGE QUANTITIES !!!
CAT# SSRLY-03 $1.50 each 25 for $31.25

D.C. Wall Transformers (120 Vac INPUT)

Volts	Amps	Plug Style	Center	Cat#	Price
8.3 Vdc	10 ma.	battery snap		DCTX-8310	$1.50
12 Vdc	100 ma.	2.1 mm co-ax	negative	DCTX-1210	$2.50
12 Vdc	500 ma	2.1 mm co-ax	negative	DCTX-125	$4.50
12 Vdc	800 ma.	2.5 mm co-ax	positive	DCTX-1281	$5.25
14 Vdc	700 ma.	1.3 mm co-ax	negative	DCTX-1470	$5.25
15 Vdc	400 ma.	2.5 mm co-ax	negative	DCTX-1540	$4.50
17 Vdc	300 ma.	none		DCTX-1730	$1.50

TWO CHANNEL COLOR ORGAN

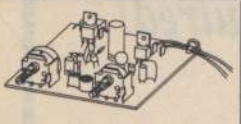

Create your own light shows. Electret mike on control board responds to music or other sounds causing lights to brighten and dim depending on frequency and volume. 120 Vac input and output. Provisions for two light strings, up to 200 watts per channel. Separate sensitivity controls for each channel. 0.25" qc terminals for output. Lights not included. 4.25" X 3.85". Hook-up diagram included.
CAT# CORG-1 $6.50 each

Make PC Boards in Minutes...

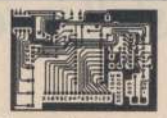

Prototypers, developers and hobbyists can now make PC boards direct from CAD, PCB layout systems or magazines using a photocopier, or laser printer. Techniks Inc's new "Press-n-Peel" copy paper allows you to photocopy PC artwork and iron it onto copper-clad board. It can then be chemically etched in the usual fashion. The process is so easy and fast you won't believe it. Five 8 1/2" X 11" sheets and instructions.
CAT# TEK-5 $9.95 each

12 Vdc FAN

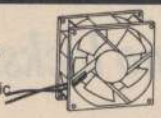

Elina Fan
MDA 120925LB
12 Vdc,110 ma.
Black thermoplastic housing and
5 blade impeller.
3.63" square X 1" thick. 14" pigtail leads.
CAT# CF-128 $ 7.50 each

VIDEO/RF MODULATOR

Originally made for use with the Commodore computer, these good quality video modulators were probably originally designed for 9 Vdc use, but they operate well on 6-12 Vdc. They accept color video and audio, and a selector switch is provided for output to channel 2 or 3. Easy to hook-up. Requires a 6-12 Vdc power supply or wall transformer and a connector to interface with your audio/video source. Output is an RCA jack. Hook-up instructions included. 3" X 1.47" X 0.75".
CAT# AVMOD-3 $5.00 each

REDUCED PRICE! 4 (USED) AA RECHARGEABLE BATTERIES

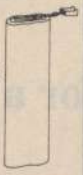

Battery pack with 4 AA nickel-cad batteries in series to make a 4.8 volt pack. Batteries have soldertabs and can be separated and reconfigured.
CAT# NCB-41AAU SPECIAL !
$2.00 per pack

12 Vdc LATCHING RELAY

Midtex # 327-21B200
12 Vdc, 400 ohm dual coil latching relay. DPDT, 2 amp contacts. Fits 16 pin DIP socket. 0.8" X 0.4" X 0.33". UL listed.
CAT# LRLY-125 $2.00 each

ELECTRONIC FLASH

ITT Magicflash. Originally designed for Polaroid One-Step and Pronto cameras. Nice bright flash can be triggered by external 3 Vdc pulse. Operates on 6 Vdc, 4 AA cells (not included). Useful for special effects of flash lighting. Circuitry includes a very desirable 600 uF 330V photoflash capacitor which is, by itself, worth the price of the unit.
CAT# FSH-2 $3.00 each

ULTRASONIC TRANSDUCERS MATCHED SET

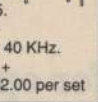

Ideal for remote control systems, burglar alarms, flow rate detectors etc.
Transmitter
EFR-OHB40K24
0.5" dia. X 0.37".
Receiver:
EFR-RUB40K25.
0.63" dia. X 0.48".
Center frequency: 40 KHz.
Band width: 4Khz +
CAT# UST-23 $2.00 per set

JUMBO LED'S

Big, bright 10 mm dia. LED's will attract attention in any display or panel. Twice the dia. of regular LED's, stand about 10 mm above panel.
RED MAXI LED **CAT# LED-22R**
3 for $1.00
GREEN MAXI LED **CAT# LED-22G**
3 for $1.00

(USED) AA RECHARGEABLE BATTERIES

Standard 1.20 Vdc 500 mAh nickel cadmium rechargeable batteries. Guaranteed.
CAT# NCB-AAU
$1.00 each

DC-DC CONVERTER

Satellite Technology Services, Inc.
AV 011
Input:
13.75 Vdc to 27.5 Vdc
Output: 13.75 Vdc @ 1.3 amps
Plugs into cigar lighter receptacle in car or airplane. Converts, filters and regulates voltage for use with 12 Vdc appliances. Fused cigar lighter plug on heavy duty 3 ft cable. 4 1/2 ft cord on output side terminates with a small DC co-ax power plug that, in most cases, would need to be cut-off and replaced with another type of plug. Ideal for powering portable TVs, communications equipment etc. **CAT# AV-011** $5.00 each

TEST LEADS

Replace broken or intermittent test leads. Red and black lead set with banana plug on one end and pin probe on other end. 3 feet long.
CAT# TL-100 $2.00 per set

STEPPER MOTOR

Shinano Kenshi Co.
STH-56D101
4 wire stepper motor.
1.8 degrees per step. 12 ohm coil.
2.22" dia. X 1.55" high. 0.25" diameter shaft with removable aluminum end assembly. 2.22" square mounting bracket.
CAT # SMT-12 $2.50 each

CABLE TIES (TIE WRAPS)

Cat#	Approx. Length	Min. Tensil Strength	Color	Max. Bundle Dia.	10	100	1000
TR-400	4"	18 lbs	neutral	15/16"	.30	$2.50	$15.00
TR-400B	4"	18 lbs	black	15/16"	.35	$3.00	$17.50
TR-600	6"	30 lbs	neutral	1 1/2"	.50	$4.00	$30.00
TR-600B	6"	30 lbs	black	1 1/2"	.50	$4.00	$30.00
TR-800	8"	50 lbs	neutral	1 3/4"	.60	$5.00	$40.00
TR-800B	8"	50 lbs	black	1 3/4"	.70	$6.00	$50.00
TR-1100	11"	50 lbs	neutral	3"	.70	$6.00	$50.00
TR-1100B	11"	50 lbs	black	3"	.80	$7.00	$60.00
TR-1500	15"	50 lbs	neutral	4"	$1.00	$8.00	$70.00
Heavy-duty 15" cable tie.							
TR-1500HD	15"	120 lbs	neutral	4 1/4"	$1.50	$12.00	$100.00

4 Digit Alphanumeric Intelligent Display

Siemens # DL-2416T.
End-stackable, four digit display module with built-in CMOS memory decoder/driver. High contrast, .160" high magnified red characters. Direct access to each digit independently and asynchronously. ASCII format. 5 volt logic, TTL compatible. Module size: 1" X 0.8" X 0.25". Includes specs and instructions. Sells elsewhere for as much as $19.95.
CAT# DL-2416T $4.95 each

ORDER TOLL FREE 1-800-826-5432

Call Or Write For A *Free 64* Page Catalog
Outside the U.S.A. send $2.00 postage.

FAX (818) 781-2653 • INFORMATION (818) 904-0524

Minimum Order $10.00 • All Orders Can Be Charged To Visa, Mastercard Or Discover Card • Checks and Money Orders Accepted By Mail • California, Add Sales Tax • No C.O.D. • Shipping And Handling $4.00 for the 48 Continental United States - All Others Including Alaska, Hawaii, P.R. And Canada Must Pay Full Shipping • Quantities Limited • Prices Subject to change without notice.

DISCOVER VISA MasterCard

MAIL ORDERS TO: ALL ELECTRONICS CORP • P.O. BOX 567 • VAN NUYS, CA 91408

CIRCLE 49 ON FREE INFORMATION CARD

ELECTRONIC LOCK PICK

Need to open any door or padlock?

With the Electronic Pick no locksmithing skill is required!

- **Lock your keys in the car?**
- **No key for a padlock?**
- **Lock yourself out?**
- **Lose a key?**

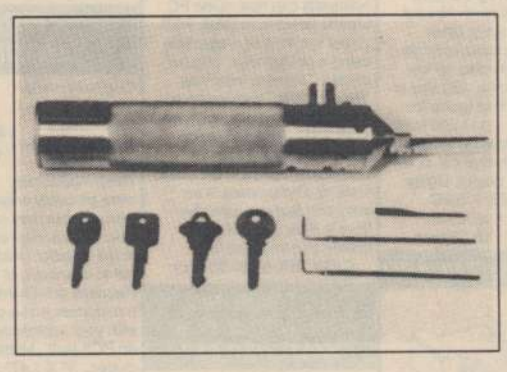

Only $199.00

Complete with a 128 page manual for opening most locks in less than ten seconds!

Send $5.00 for a complete list of locksmithing tools for any lock, auto lock, luggage, etc.

SPY Supply

7 Colby Court Suite 215
Bedford, NH 03110
617) 327-7272

CELLULAR TELEPHONE MODIFICATION HANDBOOK

How do you reprogram a cellular phone?

- **How to have two phones with the same number.**
- **Descriptions of cellular phones' vulnerabilities!**
- **Techniques for decoding & changing cellular phones' NAMS & ESN's**
- **Where to buy programming devices**
- **Chip supplier's phone numbers**
- **Instructions on how to change phone numbers on all models**
- **Cellular phone manufacturer's ESN codes**

We now offer cellular phones cloned with your existing number! Buy a handheld, transportable or car mounted phone from us or we can convert your phone! Call for details.

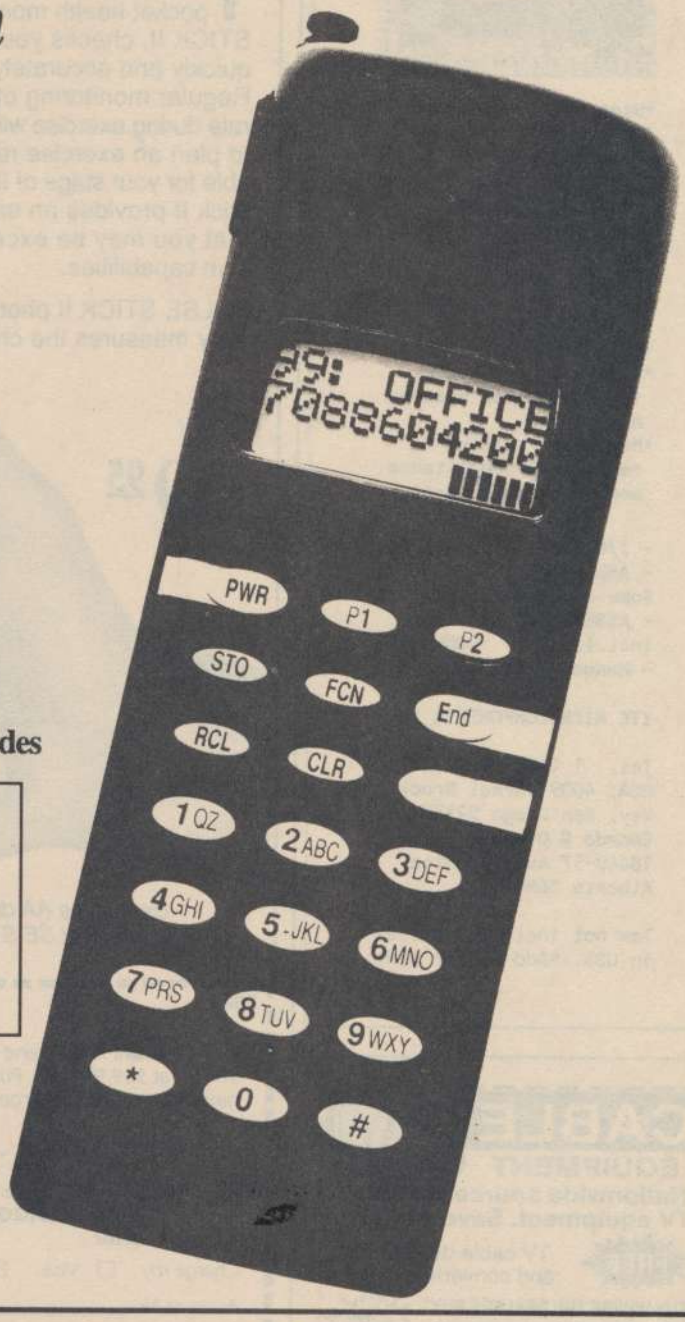

Complete Manual only $79.95

M.O. or C.O.D. to **SPY Supply**

7 Colby Court Suite 215, Bedford, NH 03110

(617) 327-7272

Sold for educational purposes only

FINALLY !

UP TO 115 KBAUD SERIAL INTERFACE TO CONTROL YOUR PROJECT FROM AN RS-232 COMPUTER PORT

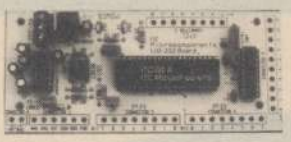

- Uses ASCII mnemonics from user's program or Procomm, MAC240, etc
- Bin, Hex or Dec formats
- 24 bit programmable I/O lines
- 10 X 8 bits Analog/ Digital channels
- 10-10,000 Hz Pulse Width Modulation
- High & Low interrupts
- 3 EASY to use logic interfaces for stepper motors
- Measures relative resistance/capacitance and much, much more!

- I/O 232 KIT*: ONLY $65
- ASSEMBLED*: ONLY $75
Some connectors not incl
- ASSEMBLED* (all conn. incl.): **ONLY $87**
- Manuals(ref): ONLY $10

ITC MICROCOMPONENTS INC.

Tel. 1 (403) 486 2377.
USA: 4009 Carmel Brooks Way, San Diego 92130 CA.
Canada & Overseas: 18440-57 Ave Edmonton, Alberta T6M 1Y2.

Tax not incl. All prices in US$. *Add $5 for S&H.

For your Heart's sake get *PULSE STICK II*

Your very own sophisticated pocket health monitor, PULSE STICK II, checks your pulse rate quickly and accurately anywhere. Regular monitoring of your pulse rate during exercise will enable you to plan an exercise regimen suitable for your stage of fitness. pulse stick II provides an early warning that you may be exceeding your own capabilities.

PULSE STICK II photoelectrically measures the changes in the pulsed intensity of infrared radiation emitted by superficial blood vessels below the skin of the thumb. The time intervals between pulses are automatically measured and analogued by the microprocessor based circuitry and displayed in a liquid-crystal display (LCD).

Before attempting any exercise program, consult your doctor. Ask for guidance regarding the recommended safe pulse ranges for your exercise program. Follow your doctor's instructions carefully.

Only
$39.95

Uses three AA dry cells supplied with PULSE STICK II

Ideal for running, walking and aerobic training programs!

PSII-2

☐ **YES!** Please send me ____ PULSE STICK II at $39.95 each. Price includes shipping and handling charges.

Total amount of order $ _____

☐ Check or Money Order enclosed. Make check payable to **CLAGGK Inc. PULSE STICK II Offer**

Charge my ☐ Visa ☐ MasterCard

Account No. _____

Exp. Date ____ / ____

Credit Card Signature _____

Print Name _____

Address _____

City _____ State ____ Zip _____

No telephone orders or C.O.D. Signature required on credit card orders. All prices include postage and handling. Payments in U.S.A. funds only. New York residents must include local applicable sales taxes. No foreign orders.

Mail orders to CLAGGK Inc. Pulse Stick II Offer, P.O. Box 4099, Farmingdale, NY 11735.

FAX orders to 1-516-293-3115.

CABLE TV EQUIPMENT

Nationwide source for cable TV equipment. Save $1000's.

FREE TV cable descrambler and converters catalog

"BUY WHERE THE DEALERS BUY"
VISA • MC • COD – ACT TODAY!
FREE 30 DAY TRIAL

MEGA ELECTRONICS

1-800-676-6342

407 Inland Seas Blvd., Winter Garden, FL 34787 #5

Don't Despair...REPAIR!

Here's how to troubleshoot and repair your electronics successfully!

You Can Be Your Own Repair Expert!

For VCRs, camcorders, audio equipment, TV equipment, computer hardware, office equipment, home appliances, automobile electronics, and outdoor equipment.

- Pinpoint and analyze problems quickly.
- Successfully complete repairs with hands-on troubleshooting instructions.
- Become skilled understanding flowcharts and schematic diagrams.
- Confidently use test equipment such as oscilloscopes, frequency counters, and video analyzers.
- Keep your equipment in top condition with effective preventive maintenance techniques.

Continue to Broaden Your Repair Expertise!

You'll receive quarterly supplements, up to 160 pages, with new step-by-step repair and maintenance instructions, valuable schematics and new repair techniques. Learn how to repair a growing variety of appliances with hands-on repair projects that will keep you up-to-date with later models and technology. You'll be thrilled with your ability to repair a growing list of electronic equipment! Supplements may be returned or cancelled at any time.

Free Schematic Service!

Build a schematic library at no cost to you. As a paid subscriber you'll receive valuable coupons for your choice of schematic diagrams. No more hassles identifying manufacturers and ordering costly schematics from different sources! Redeem your coupons - through us - any time!

Order today for your 30-day, no-risk review of The Electronics Repair Manual.

For Faster Service Call TOLL-FREE

1-800-222-WEKA

Or Fax To: 1-203-622-4187

CIRCLE 133 ON FREE INFORMATION CARD

One Source For All Your Repair Needs!

Better organized than a magazine, more current than a book.

- 900-page manual
- easy-to-follow, detailed instructions
- trouble analysis flowcharts
- safety precaution checklists
- comprehensive replacement parts list
- directory of manufacturers

Order your copy today!

MONEYBACK GUARANTEE

There's no risk in trying the ELECTRONICS REPAIR MANUAL to see if it's right for you. If you are not delighted, simply return the manual after the 30-day trial period and receive a prompt refund.

WEKA

97 Indian Field Rd.
Greenwich, CT 06830

☐ **YES!** Please rush me a copy of the new Electronics Repair Manual for only $59.95 + $5.50 shipping and handling. I understand that if I am not satisfied I may return the manual within 30 days for a complete refund. Supplements are sent quarterly for 25¢ per page (never more than $30) and may be returned or cancelled at any time.

☐ My payment is enclosed ☐ Bill me later

☐ Charge my ☐ Visa ☐ MasterCard

Acct. No. _____ Exp. Date _____

Signature _____

Phone ( ) _____ Signature and phone number are required for all orders.

Name _____

Address _____

City _____ State _____ Zip _____

All payments must be in U.S. funds. Canada add $10.
All other countries add $15. CT residents add 6% sales tax.

Mail to: WEKA Publishing, 97 Indian Field Rd., Greenwich, CT 06830

400047

CIRCLE 133 ON FREE INFORMATION CARD

MEMBRANE SWITCH KITS!

These highly durable water resistant flat-panel keypads can be assembled in minutes with YOUR legend! Available in 4, 12, 16, 24 & 40 Key models. Steel "clickdomes" optional. Connector and bezel included.

Call for free brochure

Sil-Walker 880 Calle Plano, Unit N,
Camarillo, CA 93012
(805) 389-8100 FAX (805) 484-3311

Touch Tone Decoder Display

NEW

From
MoTron Electronics

The **Tone-Master**™ Line of Hand Held Tone Decoder Display Products. Decode Touch Tones from a telephone, scanner, tape recorder, or nearly any audio source.

- ✓ **16 digit LCD display with 80 character scrollable memory**
- ✓ **High speed decoding--up to 25 digits per second**
- ✓ **Portable 9 volt battery or external power operation**
- ✓ **Completely stand-alone, no computer necessary**
- ✓ **Metal enclosure with built-in monitor speaker, only 2.75" x 6.1" x 1.2"**
- ✓ **TM-16 Plus includes RS-232 output and Software for optional automatic date/time/number logging using your computer**
- ✓ **1 year Warranty on parts and labor**
- ✓ **30 day Money Back Guarantee** (less shipping and handling)

TM-16 Standard Model	$229.00		**PS-12** AC Power Adaptor		$10.00
TM-16-PLUS RS-232 Model	$299.00		**C-904** Laptop Computer Cable		$10.00
(IBM Compatible logging Software included)			**C-905** Desktop Computer Cable		$10.00

S/H $5 USA/Canada, $15 Foreign. Visa, MasterCard & American Express Accepted.

MoTron Electronics • 310 Garfield Street Suite 4 • Eugene OR 97402
Orders: (800) 338-9058 • Info: (503) 687-2118 • Fax: (503) 687-2492

Surface Mount Chip Component Prototyping Kits— Only $49.95

CC-1 Capacitor Kit contains 365 pieces, 5 ea. of every 10% value from 1pf to .33µf. CR-1 Resistor Kit contains 1540 pieces; 10 ea. of every 5% value from 10Ω to 10 megΩ. Sizes are 0805 and 1206. Each kit is ONLY $49.95 and available for Immediate One Day Delivery!

Order by toll-free phone, FAX, or mail. We accept VISA, MC, COD, or Pre-paid orders. Company P.O.'s accepted with approved credit. Call for free detailed brochure.

COMMUNICATIONS SPECIALISTS, INC.
426 West Taft Ave. • Orange, CA 92665-4296
Local (714) 998-3021 • FAX (714) 974-3420
Entire USA 1-800-854-0547

COMPUTER BACK-UP POWER - SUPPLIES

We have several ELGAR Uninterruptable power supplies available. They are UL approved, tested before we ship and working to mfg. specs. They are new supplies except as noted. They all have 120 Vac 60Hz output and carry a 30 days warrantee.

SP350 350VA (used)
Square Wave output, 36 lbs
H 6",W 11",D 12" $ 149

The following IPS supplies have *sine wave* out and a 4mS transfer time.

IPS400+600 400VA backup 600VA buffered. Fits under the monitor and includes a five switch power distribution center. (used)
H 2..5",W 16", D 17" $ 195

IPS560 560VA, 65 lbs
H 13", W 15", D11" $ 224

IPS1100SL 1100VA, 80 lbs
H 13", W 15", D 11"
(batteries used) $ 279

IPS 1100 1100VA, 110 lbs
H 17", W 15", D 11" $ 349

ERAC Co. **Since 1974**
P.O. BOX 1108, POWAY
Ca 92074. Visa / MC add 3.3%
TEL : 619 679 8360 ***NO***
FAX : 619 679 6670 ***COD***

PRINT T-SHIRTS FOR FUN OR PROFIT!

With your computer!

FAST, EASY with Heat Transfer Printer Ribbons!

1. Put Ribbon into your printer.
2. Print message or design onto regular paper but print it in a mirror image. (Print Shop and other programs have this capability.)
3. Place paper face down on T-shirt and iron the back of paper to transfer the image.

Available in red, green, blue, or black at **$10.95** each for the following printers *(specify make and colors wanted)*: Panasonic 1080/1180/1090/1190/1123/1124; IBM Proprinter; Epson MX/FX/RX80/85/86e/LX800/LQ500/LQ510/LQ570/LL1000; Star NX/NL/NP10/NX2400/2410/2415/2420/LC2410/2415; Seikosha SP800/1000; Tandy DMP130; Epson AP80; Apple Imagewriter; Citizen 120D/180D/GSX140; Okidata 182/192/320/390.

$11.95 each for Epson MX/FX-100/286e, LQ 1000/1050, LQ2500/2550/EX800/1000/LQ860 **$5.95** each for Okidata 82/92/83/93/Gemini 10X/15X.

Available in **BLACK** only at **$10.95** each for Panasonic 1624/1524, Star NX1000, NEC P2200, Commodore MPS-801.

Available in 4 Color Heat Transfer for Imagewriter II **$12.95**; Star NX1000 **$14.95**; Star NX1020 **$23.95**; Star NX2420 **$23.95**; Citizen GSX140 **$23.95**; Epson EX800/1000/LQ2500,2550 **$16.95**; Fujitsu DX2100/2200/2300/DL3300/3400/3600 **$27.95**. Panasonic KX-P 2180/2123/2124 **$23.95**

HEAT TRANSFER MARKING PENS
Add colors to the computerized design or use alone. Set/5 Colors (red, orange, yellow, green, blue) wide pens **$15.00**, narrow pens **$14.00**.

HARD-TO-GET PRINTER RIBBONS

Over 200 different ribbons in stock. All ribbons new, not re-inked. Fully guaranteed. Order directly or send SASE for complete list.

Add $2.00 per order shipping. California residents add 7.75% sales tax. On ribbon orders over $30.00 deduct 10% discount.

H.T. ORR
Computer Supplies
249 Juanita Way, Placentia, CA 92670

VISA MasterCard

714-528-9822
800-377-2023
FAX 714-993-6216

Before you buy a product . . .

☑ **Read the label**
☑ **Check the package**

If *anything* seems wrong, tell the store manager.

☑ **When you open it, CHECK IT OUT again. If it looks or smells wrong, take it back.**

— A message from this magazine and the Food and Drug Administration

GET THE LATEST ADVANCES IN ELECTRONICS

WITH A SUBSCRIPTION TO

Electronics NOW®

Radio Electronics® Combined with

Electronics Now gives you exciting articles like:

- Buyer's Guide to Digital Oscilloscopes
- Build A Scanner Converter
- Single-Chip Voice Recorder
- Build A MIDI Interface for your PC
- Troubleshoot Microprocessor Circuits
- Build A High-Power Amplifier for your Car
- Add Music On Hold to your Phone
- All About Binaural Recording
- VGA-to-NTSC Converter

ENJOY THE WORLD OF ELECTRONICS EACH MONTH!

Subscribe to the best electronics magazine—the one that brings you the latest high-tech construction projects, feature articles on new technology, practical troubleshooting techniques, circuit design fundamentals, and much more.

Electronics Now looks to the future and shows you what new video, audio and computer products are on the horizon. What's more you'll find helpful, monthly departments such as Video News, Equipment Reports, Hardware Hacker, Audio Update, Drawing Board, Computer Connections, New Products, and more. All designed to give you instruction, tips, and fun.

FOR FASTER SERVICE CALL TODAY

1-800-999-7139

DON'T DELAY SUBSCRIBE TODAY!

Just fill out the order card in this magazine and mail it in today.

7PJ31

FCC LICENSE PREPARATION

General Radiotelephone
Radiotelegraph
Amateur Radio Licenses

We offer the most up-to-date study materials available. Our formats include: tests, audio programs, and video programs. Q & A Disks

WPT PUBLICATIONS
7015 N.E. 61st Ave.
Vancouver, WA 98661
(206) 750-9933

CIRCLE 132 ON FREE INFORMATION CARD

PCBoards

PCB ARTWORK MADE EASY!

"Are you tired of laying down tape or wire wrapping to make printed circuit art? End the nightmare with the PCBoards Circuit Layout Program for just $99.00! Easily create single or double-sided circuit boards with professional results."

- EGA, VGA, & SuperVGA
- Gerber and Excellon output
- Built-in help screens
- Component libraries
- Build custom parts easily
- Copper flood for building ground planes
- Block move, copy, rotate, save, etc.
- Comes with dot-matrix & laser output
- Make pcb's with heat transfer film
- Mirror imaging for laser output

Requirements: DOS 3.0 or later, 1 disk drive, 384k of RAM, IBM-PC or compatible

Download Demos from our 24hr BBS at (205) 933-2954

PCBoards Software Prices:		Add on Software:	
PCBoards Layout	99.00	PCRoute Autorouter	99.00
Gerber and Excellon Drivers	49.00	PCRoute+ Autorouter	149.00
Plotter Drivers	49.00	SuperCAD Schematic	99.00
Demo Package (all software)	10.00	SuperCAD+ Schematic	199.00

Use PCBoards, PCRoute, and SuperCAD as a "system" to create pcb art from a schematic!

PCBoards - 2110 14th Avenue South, Birmingham, AL 35205 / Ph. **(800)473-PCBS** Fax (205)933-2954

PE MARKET CENTER CLASSIFIEDS

Satellite-TV

FREE Catalog

SAVE 40% - 60%
800-334-6455
218-739-5231 Int'l
218-739-4879 Fax
Skyvision Inc.®
1048 FRONTIER DRIVE • FERGUS FALLS, MN 56537
INSTALL OR UPDATE YOURSELF!

CABLE TV

"BULLET" BUSTER. Protect your cable box against the infamous "bullet." The "Bullet" Buster acts as an electronic shield. Installs in-line in seconds. Don't wait until it's too late! $19.95 plus $3.00 S&H. **ELECTROMAN,** Box 24474, New Orleans, LA 70184. (504) 482-3017.

CBTV DOCTOR Stop the Bullet and ID signal in cable line. Order your set now. Send $17.50 and $2.50 S&H to: R.R. Enterprises, PO Box 3532, Easton, PA 18043-3532.

UNDETECTABLE CABLE DESCRAMBLER will work on all systems **GUARANTEED!** Send SASE/info, $94.95/kit, $14.95/plans. Mystical Electronics, PO Box 867, Stonington, CT 06378.

TRI-BI PROBLEMS? TVT problems? Flashing? Intermittent scrambling? Black lines? Don't buy the same model with a new chip! Upgrade the TVT you already own with a new PLD chip from **VIDEOTRON** for only $29.95. Test chips for Tocom 5503/7 VIP, Starcom 6 & 7 also $29.95 each. Scientific Atlanta 8580-338's $229.00 each. Upgrades for all Starbase and tri-bi models $25.00 each. **VIDEOTRON** (219) 989-9789.

Cable Aids Test
Orders only 1-800-452-7090 *Information (310)867-0081*

Test chips for JERROLD, TOCOM, ZENITH, S.A. & more. Puts cable boxes in full service mode. Easy installation. Zenith only $39.95. Most others under $50ea. Quantity prices available.
No Ck. sales. Not for use in cable co. owned equip. For use as a test aid only.

EDUCATION

LEARN SKILLS electrical and electronic. Most courses **$49.50.** Catalog $2.00. A&A Products, Rt1 Box 482-L, Rockdale, TX 76567.

COMPUTER HARDWARE

STEPPER CONTROL FROM YOUR PC SPO3 kit $30.00, assembled $55.00. Controls three unipolar steppers or twelve inductive loads to 500mA 36V, four TTL inputs. Use four SPO3 for twelve steppers or 48 loads. Easy installation, software and programming examples. **CILIATRON,** Box 541294, Grand Prairie, TX 75054-1294.

COMPUTER SOFTWARE

ELECTRONICS TUTORIAL software program. Over 1000 screens, 48 modules, of interactive information, schematics and help on DC, AC, analog and digital. Menu driven. Ideal for job preparation, reference, or for use as a study aid. IBM format. $30.00. (Specify monochrome, EGA or VGA). Tutor-Tech, 5591 Kimberly St., San Jose, CA 95129. (408) 252-3223.

FREE SOFTWARE CATALOGS. IBM, Apple II, IIGS, Commodore, Atari, Amiga, Mac. 1000's of great programs as low as $2.00/disk. LT-1 Enterprises, Marengo, IL 60152. 1 (800) 382-3373.

PROGRAM THE 8051 microcontroller in Basic with this PC/compatible shareware collection. Disk contains Editor, Basic Compiler, Assembler, Disassembler, Procomm plus 3 surprise programs. Only $7.00 from Suncoast Technologies, PO Box 5835PE, Spring Hill, FL 34606.

PC BOARD and schematic design software for the IBM PC/compatible. Create professional PCB layouts (with autorouting — requires EGA) and electronic schematics (CGA) with these inexpensive shareware programs. Both for $7.00. Suncoast Technologies, PO Box 5835PE, Spring Hill, FL 34606.

MARYMAC®
The New Realistic® PRO-43 Scanner
Radio Shack®
PHONES
Our 17th year of DISCOUNTS
Toll Free 800-231-3680
PRO-43 List $349.95
Our Delivered Price $290.00
We discount everything in the RS catalog
22511 Katy Fwy.
Katy (Houston), TX 77450
1-713-392-0747 FAX 713-574-4567

The Time Has Come...

...to send for the latest copy of the free Consumer Information Catalog. It lists more than 200 free or low-cost government publications. Send your name and address to:

Consumer Information Center
Department TH, Pueblo, Colorado 81009

U.S. General Services Administration.

Test Gear for Hams

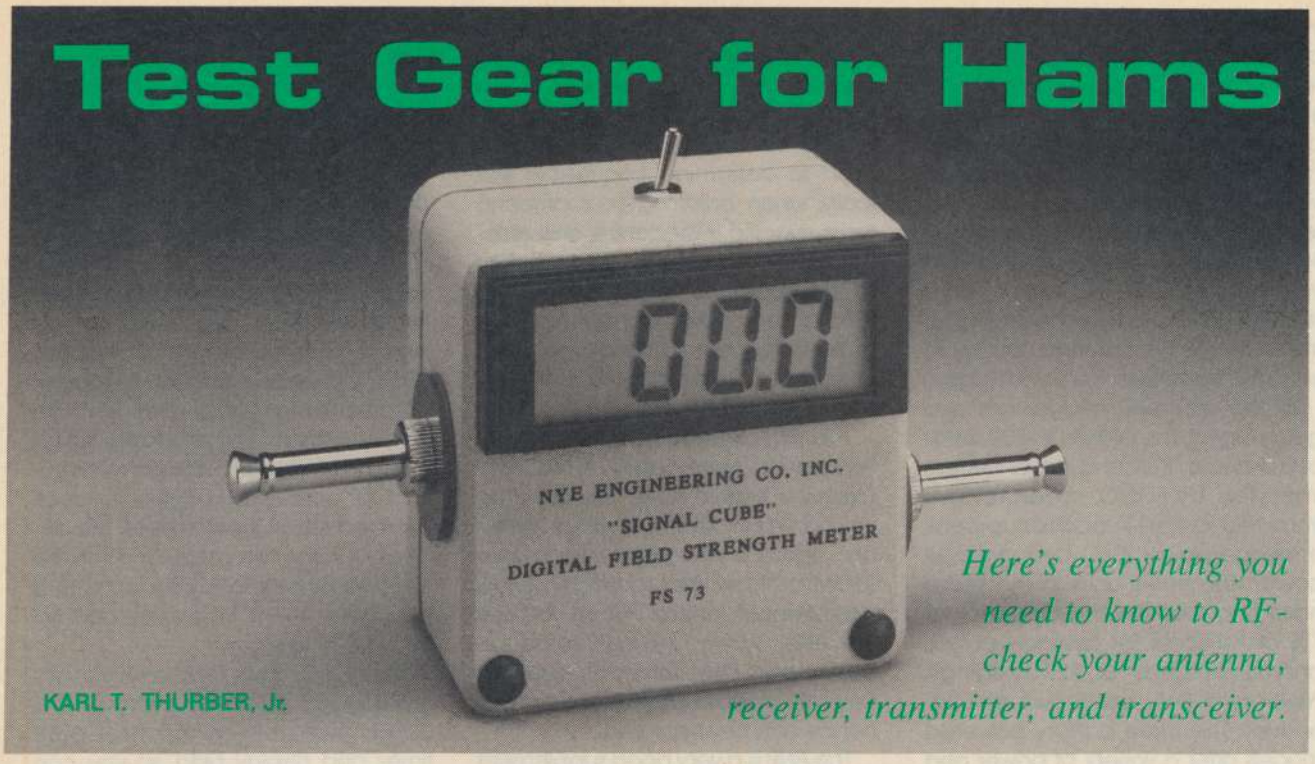

Here's everything you need to know to RF-check your antenna, receiver, transmitter, and transceiver.

KARL T. THURBER, Jr.

Unlike hobbyists of a bygone era, today most radio amateurs buy their equipment ready-made. Fine, but how do they know if their gear is properly adjusted, tuned, coupled, and matched to their antenna?

Fortunately, there are ways to check the performance of your transmitter, receiver, or antenna system by making simple measurements of radio frequency (RF), voltage, current, power, and standing waves. The instruments range from flashlight bulbs and field strength meters (FSM's) to complex standing-wave-ratio (SWR) analyzers and digital frequency counters.

While you don't need an expensive suite of RF test equipment to get on the air, you are sure to accumulate several pieces of test gear as you gain experience. In this article we'll focus on high-tech RF test instruments for the 1990's.

RF test equipment has come a long way over the years. All that's certain is change in the field, and the nature of that change is largely of a computerized, digital, and convenience- oriented nature. Many long-familiar instruments already have a 1990's complexion to them, and several devices are entirely new. Fortunately, you don't have to be an electronic whiz to make use of the new-style RF test gear.

The RF Wattmeter. The RF wattmeter indicates RF power in a transmission line or other electrical circuit. Most are DC voltmeters connected across a known impedance. The meter scale is calibrated in watts. An RF wattmeter measures average or peak RF power, or both.

The RF wattmeter is typically used with a dummy load to measure transmitter power. You can also determine transmitter final output-stage efficiency by comparing the power entering the final amplifier stage with the RF-wattmeter power reading. To determine the final stage's input power you must measure the input current and voltage and multiply them to get power in watts.

Today, most RF wattmeters handle full legal amateur power limits with an accuracy of ± 5%. The most versatile ones are bidirectional: you can measure both forward and reverse (reflected) power. That means you can also use the meter to measure the standing-wave-ratio. Many newer wattmeters are digital, using LED bargraph indicators or LCD displays. Others are cross-needle types that simultaneously show both forward and reflected power, a real help in visualizing the complete RF-power/SWR picture.

The SWR Bridge. Most antennas and antenna couplers must be tuned to achieve optimum performance. There are various ways to do this; minimizing SWR is one of the most common and convenient methods of checking antenna systems. Most modern SWR bridges handle full amateur power levels and depict both forward and reflected power without using calibration or conversion charts.

The SWR bridge lets you determine how good the match is between your transmitter, transmission line, and antenna. These relationships depend on the impedances of those items. The bridge measures the ratio of forward voltage to reflected voltage in the system. A perfectly matched system is said to have an SWR of "1-to-1," sometimes written as "1:1." When, for example, you connect your transmitter to one end of a 50-ohm transmission line terminated in a 50-ohm load at the other end, theoretically you have a perfect match—an SWR of 1:1.

Almost all amateurs routinely use SWR bridges to tune their antenna systems, and they leave them in place at all times as a constant check on the transmitter and antenna system. But you shouldn't place total reliance on SWR readings. Why? For one, only adjusting the antenna itself, and not an antenna coupler or the transmission-line length, changes the SWR at the antenna, where it really counts. So, if

you have the SWR bridge connected between the transmitter and the antenna coupler, all you're doing is making sure the transmitter sees the proper load impedance. That does nothing for the line SWR. However, if you're using a multi-band antenna fed with low-loss openwire or ladder line, the SWR of the antenna itself isn't very important: all you need to do is monitor SWR on the line from the transmitter to the antenna coupler to keep the transmitter cool and happy.

By the way, SWR bridges are also going digital. The DAIWA DP-800 series of LED-display SWR and power meters, imported by EDCO, measure SWR from 1:1.0 to 1:5.0 in addition to peak envelope power (PEP) and average power. The three units in the series have a power-reading accuracy of 7% of full scale for average power, and 12 percent for PEP readings. Power and SWR are shown simultaneously. The three battery-powered models offer a variety of power and frequency ranges, handling up to 1500 watts from 1.8 to 525 MHz. The top-of-the-line DP-830 ($385.95) includes a four-time-zone clock. The DAIWA meters are sold by Electronic Distributors Co. whose address appears with those of all other manufacturers and distributors mentioned in this article in the boxed copy entitled "Firms and Vendors."

A less-fancy digital SWR/power meter, the TR-100, with a ¾-inch LCD display is offered by Rupp Electronics. The unit covers 1.8–30 MHz and handles 1 to 1625 watts PEP. It automatically calculates SWR, even during AM, FM, or SSB modulation. The assembled unit sells for $210; a kit is available at $124.

The Antenna Noise Bridge (ANB). The ANB is useful in adjusting an antenna system to resonance because it only requires a receiver for use; no transmitter energy need be fed to the antenna. The ANB is, in fact, an updated, hybrid follow-up of earlier instruments, known variously as the antennascope, antenna bridge, impedance bridge, antenna null detector, and Z-bridge.

Modern ANB's contain a broadband-noise generator and an RF impedance bridge. The known leg of the bridge has a calibrated variable resistor and a calibrated variable capacitor, controlled by front-panel knobs. The antenna or circuit to be measured is connected to the unknown leg of the bridge, while a calibrated communications receiver is used to determine frequency. Typically, when adjusting your antenna for a specific impedance and resonant frequency, you set your receiver to the operating frequency and the ANB for the desired impedance. You make antenna adjustments that result in a distinct noise null, as indicated by the receiver's S-meter.

The big difference between the ANB and its predecessors is that it includes a built-in noise source. Thus, you don't have to drive it with an external signal from a grid-dip meter (GDM) or transmitter, making for a "no interference" tuneup. When you use the ANB with a well-calibrated receiver, both the antenna's resonant frequency and its impedance at resonance can be measured.

The ANB is a very good supplement to the SWR bridge since it lets you learn a good deal more about your antenna system than using the ratio-reading SWR bridge alone. The ANB allows you to determine capacitive and inductance reactance, the resonant frequency of tuned circuits, and resistive impedance, among other things. Unlike the SWR bridge, the ANB gives you an important clue to "which way to go" to adjust the antenna to resonance.

However, ANB's are low-power devices: they're not to be left in the line. They're mainly for initial antenna adjustment; once adjustments are made, the inline SWR bridge is a better choice to continuously monitor performance. SWL's particularly like ANB's since they don't need a transmitter as a source of RF.

One ingenious ANB variant is the Palomar Engineers' PT-340 Tuner-Tuner, a switchable RF device. It derives its name from the fact that it allows you to "tune your tuner" without transmitting. As such, it's also popular with SWL's. The PT-340 is $99.95 and covers 1.7 to 30 MHz. A front-panel switch lets you bypass the unit when transmitting. In operation, you connect the device between your rig and the antenna tuner. You then tune the receiver to the desired frequency and turn on the Tuner-Tuner; you'll hear a loud noise. You adjust the tuner until the noise drops-out (nulls) completely; then you turn off the device and you're ready to transmit with an SWR approaching 1:1.

Going Digital: the Frequency Counter. Most amateurs seek frequency accuracy in their equipment. Fortunately, modern digital electronics has largely solved the age-old "what frequency am I really on" dilemma with the advent of the frequency counter. A frequency counter is a precise measuring instrument with circuitry that accumulates input pulses in binary form and converts the total for display by a digital readout. Price reductions have moved the device out of the laboratory and into the radio hamshack. Today, you can buy a handheld, 3-GHz frequency counter for $200 or less.

Many counters feature high accuracy and sensitivity even for UHF. Others feature a selection of gate times and display hold, so you can freeze a reading to examine it later. Others have blanked displays that light up only when a signal is present. Still others allow operation from AC, internal NiCd batteries, or an external battery.

A frequency counter can also be used to extend the accuracy of roughly calibrated test equipment such as grid-dip meters (see the boxed text entitled "Early Test Equipment"). If you want to, say, fine-tune the frequency at which minimum antenna SWR occurs, you need a precise indication of frequency. You can calibrate the GDM frequency by listening to its signal on a receiver or feeding it to a counter.

If you'd like to turn your PC into a desktop frequency counter, Optoelectronics offers its PC10 PC-Based Multifunction Counter. It includes a plug-in PC board and software to operate under Windows 3.1 and features data logging to disk. The 10-digit counter covers from 10 Hz to 2.4 GHz. It's $199 from Optoelectronics.

What if you have a classic analog radio but you'd like to "go digital?" A frequency counter spinoff is the digital-readout adapter, an add-on for analog radios such as the popular Yaesu FRG-7 receiver and the FT-101 transceiver. One firm offers a kit, the C.M. Howes Communications DFD4 Counter/Display, that you can pro-

Early Test Equipment

It doesn't take sophisticated, finely calibrated gear to measure voltage, current, and SWR. In many cases, all that's needed is a relative measurement of power, or a quick SWR check; we're often just interested in putting maximum power into a line and not in knowing precisely how much power is flowing.

In fact, yesterday's radio amateurs used many simple RF test instruments that contributed to the development of modern-day equipment. Some of that gear is still with us and can have a place in the modern radio hamshack. Let's examine some vintage equipment starting with the RF ammeter.

An RF ammeter, a thermocouple connected to a DC meter, indirectly measures RF current; its scale is usually graduated in amperes, milliamperes, or microamperes. It was the most basic instrument in the old-time radio hamshack. Amateurs relied on it to tune their transmitters for maximum output and to estimate how much RF was going to the antenna (which was normally fed through single-wire or open-wire feeders, not modern coaxial cable). While the SWR bridge is the usual RF measuring instrument of choice with coax-fed antennas, the ammeter still can be useful in tuning direct-fed antennas and making RF power calculations using simple Ohm's Law relationships.

If you use parallel-conductor transmission line, such as openwire line or ladderline feeding a dipole, you may find the RF ammeter helpful in trimming the two legs of the antenna for electrical symmetry or balance. In doing that, two ammeters are usually used, one in series with each side of the feedline; each antenna leg is cut or pruned until the currents are about equal. For transmitters having power inputs up to about 250 watts, a 2-ampere meter should do, while a 5-amp unit handles all legal amateur power levels.

Rarely seen today, another aid called "Lecher wires" (or Lecher lines) were tunable resonant circuits made up of two parallel wires that were coupled to a transmitter or oscillator circuit and used to physically measure wavelength. The two wires formed a short transmission line with pronounced resonance effects on which standing waves appeared. The wavelength of the frequency being output by the signal source was equal to twice the distance between any two consecutive current loops, or maximums.

The device was most useful on VHF and UHF due to its large dimensions at lower frequencies. It was usually built on wooden planking, with the two wires being tightly stretched between end pieces using turnbuckles. For determining frequency, a one-turn wire loop and a flashlight bulb or meter were loosely coupled to the transmitter's output ("tank") circuit as an indicator.

A sliding contact or shorting bar was moved down the wires until a pronounced dip in lamp brightness occurred, and the position was marked. The bar was run down the wires until a second dip was observed. The distance between the two points was a half-wavelength, which could be converted to frequency. The measurement process was cumbersome, but surprisingly accurate.

The "twin-lamp" was popular in the 1940's and 1950's when parallel-conductor transmission lines were standard. It really was a very inexpensive, visual SWR-measuring device that could give a rough indicator of standing waves on parallel-conductor transmission lines (openwire line, ladderline, or twinlead).

The device was two flashlight bulbs, a short piece of twinlead, and some electrical tape. The two lamps were inductively coupled to the line so that the forward power caused the bulb nearest the transmitter to illuminate, while the reverse power (indicating any mismatch) lit the other bulb. The idea was to tune the transmitter so that the forward bulb glowed brightly and adjust the antenna so the reverse bulb was dim or extinguished. Such a sought-after condition would indicate an SWR close to the desired 1:1 ratio. Some amateurs tried to adapt the device to coax, but twin-lamps were no match for SWR bridges.

Another device called the "absorption wavemeter" was a passive unit used to measure frequency by absorption of energy from the RF source. It had a tuned circuit that was loosely coupled to the transmitter. Maximum energy was absorbed from the RF source, as shown by a meter or flashlight bulb, when the circuit was resonant. You could determine frequency by referring to a calibrated dial on the meter face or a separate conversion chart.

In its day, the wavemeter was great. It could roughly check variable-frequency oscillator (VFO) frequency, detect transmitter harmonics and parasitic oscillations, and adjust power-amplifier neutralization. It could also double as a field-strength meter. But it wasn't a very accurate device.

The frequency meter, predecessor of the modern frequency counter, was a calibrated instrument that indicates the frequency of a signal applied to it. The most common type is the heterodyne frequency meter. It contains a frequency generator (oscillator) that's tuned to beat or heterodyne with the signal being measured. The two signals are at the same frequency when they're at "zero beat;" this frequency can be read out on a meter or by using a conversion chart.

Few amateurs built their own frequency meters since they had to be very stable and carefully calibrated to be accurate. But the burgeoning postwar military-surplus market offered the popular BC-221 frequency meter (also known as the "Navy LM" meter) that could provide good frequency-measurement accuracy.

Wilfred Scherer, W2AEF, described a revolutionary, multipurpose instrument—the antennascope—in the September 1950 CQ magazine that would serve as the forerunner of several modern RF test accessories. The antennascope was an RF impedance-measuring meter that could determine antenna resonance and impedance, match transmission lines for minimum SWR, and find the input impedance of communications receivers, among other things. Later marketed commercially by several firms, it was about the size and shape of a grid-dip meter and was, in fact, designed to be driven by a GDM as the signal source. The handy device could measure impedance up to about 1000 ohms and was usable up to a then astounding 200 MHz.

Amateurs of the 1950's found many wonderful uses for the antennascope. These included pruning mobile-antenna loading coils, adjusting beams and matching stubs, tweaking the length of verticals and dipoles, determining SWR, tuning television interference (TVI) filters and traps, and more. These were tasks that were difficult or impossible to carry out before, or could only be roughly approximated with other instruments.

In the 1960's and 1970's, antennascope-based designs were refined and given names like the antenna bridge, antenna-null detector, Z-bridge, and Macromatcher. These "close cousin" and hybrid instruments allowed amateurs to learn a good deal more about their antenna systems than just an SWR and roughly estimated resonance. However, these devices usually required an external low-level source of RF, such as a GDM, signal generator, or VFO. This meant that operation was cumbersome, requiring two instruments. Results still tended to be inaccurate, being limited primarily by the frequency accuracy of the RF signal source. Another drawback was that most such instruments were very-low-power devices: you had to remove the instrument when actually transmitting.

These early RF test instruments set the stage for the later development of a host of new devices suitable for the high-tech 1990's. In fact, if you look closely at the new devices we've discussed with an eye on the past, you'll see that they mix, match, and improve upon a variety of the characteristics of the older instruments. ■

Shown here is the Bird Model 4391 Power Analyst, a high-accuracy and expensive bus-compatible digital-display RF-power and SWR meter. It is best suited for commercial and laboratory installations and those amateurs who insist on professional-quality instrumentation.

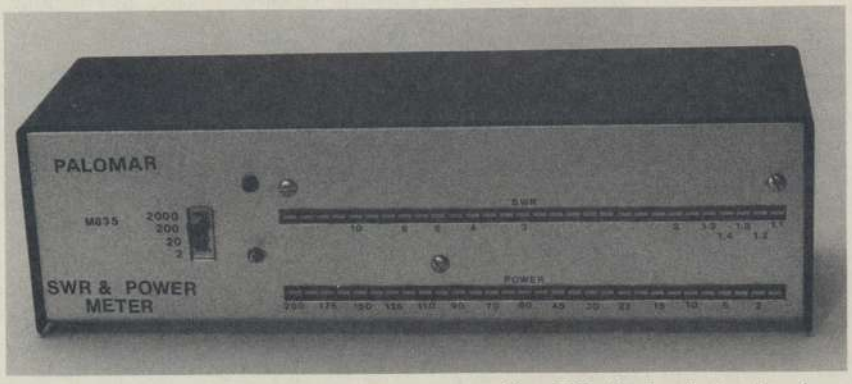

The M-835 SWR and Power Meter is an instant reading LED-display device that shows single-sideband peak-envelope RF power. The meter also computes SWR automatically and displays it on a bargraph. The unit features two 30-element, six-inch LED readouts for a reading resolution of better than 3% of full scale.

gram for any intermediate frequency (IF) to use with almost any analog-display communications equipment, including military-surplus sets. It offers a four-digit frequency readout. A complete kit with all options is $116.95 from Townsend Electronics, Inc. A comparable assembled unit, the PD-700 Digital Frequency Display, is $199.95 from Palomar Engineers.

The SWR Analyzer. Tuning an antenna using a conventional SWR bridge is usually a two-person operation. To tune and match the antenna to a coax feedline takes one person at the antenna to make the adjustments and another in the hamshack to sweep the band with a transceiver or transmitter and observe the SWR meter dip. This procedure is poor operating practice at best and illegal at worst since it generates unnecessary interference. A better SWR-adjusting procedure has long been needed.

Only recently have the three devices (SWR bridge, low-power RF signal generator, and frequency counter) been integrated. MFJ Enterprises has combined the three instruments in a single package, the MFJ-247 HF SWR Analyzer. It covers 1.75 to 33.5 MHz, and requires six AA batteries or an optional 12-VDC power supply.

The MFJ SWR Analyzer's computing circuitry automatically calculates SWR and displays it on a built-in meter. To measure SWR, all you need do is connect your antenna's feedline to the analyzer's antenna input, set its "tune"

The Tennatest antenna noise bridge offers several useful RF-measurement capabilities, including the determination of resonant frequency of a tuned circuit or antenna, the SWR at resonance, resistive impedance, inductive reactance, and capacitive reactance.

knob to the desired frequency, and directly read the SWR. Or, you can make a sweep of the dial while watching the counter readout. Doing so approximates the resonant frequency of the antenna by displaying the frequency at which lowest SWR occurs, as indicated by the unit's meter. You can quickly see which way to adjust the antenna for resonance. You can also use the analyzer to tune an antenna coupler.

You can usually make the measurements at the hamshack end of the coax. However, because the analyzer is battery operated, you can take it to the antenna and adjust its length or the matching device yourself, without the need for a hamshack assistant.

The built-in frequency counter is normally used to simply display the frequency of the analyzer's internal oscillator. But you can also attach an RF probe or short piece of wire to the counter's BNC-style input connector. That lets you accurately measure the frequency of an external RF source, allowing the analyzer to double as a frequency counter. The analyzer is

The MFJ-207 HF and MFJ-208 VHF SWR Analyzers physically resemble old-style dip meters, but the analyzers contain a built-in SWR bridge and RF source. When you sweep the band within which the antenna is supposed to be resonant, you get an estimate of the antenna's resonant frequency by observing the dial frequency at which the SWR dip occurs.

available from MFJ Enterprises.

As we went to press, MFJ announced the "universal" MFJ-249 SWR Analyzer ($199.95). It's similar to the MFJ-247 and includes a built-in 10-digit LCD frequency counter, but it covers 1.8–170 MHz continuously, making it useful for both HF and VHF use. The new MFJ-209 SWR analyzer ($109.95) has all the features of the MFJ-249 except for the frequency counter.

Grid-dip Meters. Although it's fallen out of favor today, the grid-dip meter (GDM), sometimes called the grid-dip oscillator, or GDO, was a capable instrument for determining RF circuit or antenna resonance. It used a tuned RF oscillator and meter to indicate absorption of energy from the unit's resonant tank circuit by the circuit under test—an antenna system, a loading coil, or a coil-and-condenser combination. The frequency at which absorption occurred was the resonant frequency.

The GDM was a dual-mode instrument that could be used in either an active (oscillating) mode or in a passive mode, like a wavemeter, depending on whether the circuit being examined was active or passive. The GDM also served as a wideband signal generator or marker oscillator since it typically covered the RF spectrum from LF through UHF.

The GDM was a remarkably simple instrument to use: you just held the dipper next to the circuit being tested and turned the dial. When the meter reading dipped, you had the resonant frequency. Unfortunately, the calibration of most GDM's was only approximate, close enough for casual purposes, but not really good enough for precision work. Still, GDM's could be used with a calibrated communications receiver or a frequency counter to significantly increase overall measurement accuracy.

One instrument manufacturer recently modernized the grid dipper, which is still one of the most versatile pieces of ham-shack equipment. The new MFJ-203 bandswitched dip meter, priced at $99.95, is a sensitive GDM that covers all bands from 160–10 meters. Unlike classic GDM's, there are no plug-in coils to contend with, nor is there a sensitivity control to adjust. The instrument takes much of the guess work out of winding coils, pruning antennas, locating parasitic oscillations, and more.

Measuring the RF Environment. All of the RF test equipment we've discussed so far has been offensively oriented—designed to improve transmission and reception. But, with increased concern in the 1990's for human health and the Earth's environment, another entirely different class of RF test equipment is becoming quite popular.

Many are concerned about the effects of being subjected to strong AC electric and magnetic fields. While all the facts aren't yet known, it seems that the risks of certain cancers and other physiological and psychological abnormalities are increased by exposure to magnetic and electric fields.

AlphaLab offers its $140 TriField electromagnetic pollution meter that measures both alternating electric and alternating magnetic field strength. It also indicates radio/microwave power and the full (three-axis) magnitude of field strength.

Firms and Vendors

Adams, F. Gordon, W8URR
1025 Wildwood Rd.
Quincy, MI 49082
Tel. 517-639-8195

AlphaLab
1272 Alameda Ave.
Salt Lake City, UT 84102-1703
Tel. 801-532-6604

American Radio Relay League (ARRL)
225 Main St.
Newington, CT 06111
Tel. 203-666-1541

Bird Electronic Corp.
30303 Aurora Rd.
Solon, OH 44139-2794
Tel. 216-248-1200

DAIWA/Electronic Distributors Co. (EDCO)
325 Mill St., N.E.
Vienna, VA 22180
Tel. 703-938-8105

MFJ Enterprises, Inc.
Box 494
Mississippi State, MS 39762
Tel. 800-647-1800

Nye Engineering Co., Inc.
4020 Galt Ocean Dr. #606
Fort Lauderdale, FL 33308
Tel. 305-566-3997

Optoelectronics
5821 N.E. 14th Avenue
Ft. Lauderdale, FL 33334
Tel. 800-327-5912

Palomar Engineers
PO Box 462222
Escondido, CA 92046
Tel. 619-747-3343

Rupp Electronics
5403 Westbreeze Trail
Ft. Wayne, IN 46804
Tel. 219-432-3049

Townsend Electronics, Inc.
PO Box 415
Pierceton, IN 46562
Tel. 800-944-3661

Both magnetic and electric fields in the vicinity of the human body can produce AC electric current inside the body. Apparently this current interferes with the normal transport of ions across cell membranes. What can be done? By measuring field levels in your home, hamshack, or office, you can move equipment to reduce your exposure and take corrective action to avoid long term hazards from devices that emit high "electromagnetic pollution" levels. Amateurs running high power with directional antennas may well be concerned with such potentially damaging effects. To meet these concerns, AlphaLab offers both an inexpensive electromagnetic-pollution meter and a magnetic scanner that are suitable for hamshack, home, and office use.

Field-Strength Meters. Field-strength meters (or FSM's) are simple devices that measure relative signal strength, although some commercial devices accurately measure field strength and so can be used in directional-antenna pattern study. Amateurs also use untuned FSM's as monitors to check the output of handheld and mobile radios and generally confirm that their signal is actually "on the air."

More expensive and sensitive FSM's make use of a small, tunable RF-amplifier circuit. The more sensitive tuned units are useful for very low power (QRP) work, tracking down harmonics and spurious oscillations, and confirming on which band you're actually transmitting (often a real problem with simple, homebrew transmitters). The more sensitive devices can be placed far from the antenna and can be used to roughly plot antenna-radiation patterns. Other uses include checking RF levels in the hamshack and on ground leads and counterpoises, as well as tracking down hidden radio-frequency interference (RFI) sources.

Today the FSM has entered the digital 1990's with LCD-display models. An example of this updated technology is the Nye Engineering FS 73 Signal Cube. The 9-volt battery-operated unit costs $159 and is 2.5 inches square and 2 inches deep. It's untuned and broadbanded, covering 0.1 to 450 MHz, and it has a large digital display to indicate RF amplitude. Unlike most amateur FSM's, this one can be used for both relative and absolute readings; it includes a calibration chart to determine actual volts/meter. Sensitivity is as high as 0.03 volts/meter, depending on frequency. It's sold by Nye Engineering Co., Inc.

Putting Instruments to Use. What are some of the things you can do with the devices we've described? Reading between the lines of this article, you probably can see that there's really little that's totally new in the RF world: amateurs have used some of the devices we've described for many years. But today it's a great deal easier to tune and prune an antenna using up-to-date instruments like dual-needle or digital SWR/wattmeters, SWR analyzers, and ANB's than using an RF ammeter or GDM. Too, if you're an SWL or scanner hobbyist, many of the new devices, such as the ANB and the SWR analyzer, can be used without the need for an external RF source.

So, then, what are some of the things you can do rather easily with a modest suite of modern RF test equipment? You can, for example, find your antenna's SWR and resonant frequency at the feedline, without the need for an assistant. You can monitor SWR changes as you adjust the antenna, lengthening or shortening elements and seeing the effect immediately. You can also adjust your antenna or tuner without transmitting; this makes it easy to see how an antenna system's SWR changes over an entire band.

That's not all. You can effortlessly determine the so-called "usable" (2:1 or 3:1) SWR bandwidth for your HF mobile antenna, adjusting whip placement, resonance, and matching without generating interference. You can check multiband dipoles and verticals in a flash to see where the resonant frequencies and minimum-SWR points are on each band. You can also see the effect of swinging your beam toward a power line or other object on the SWR. It's also easy to see how rain or snow affects your antenna's SWR and even check the SWR of your linear amplifier's input circuit.

Parting RF Thoughts. Despite the high-tech nature of these instruments, for many purposes only rough, relative RF measurements are needed: you're

The Bird 4041 FSM offers high sensitivity over the range of 1-100 MHz.

often interested in relative and qualitative—not absolute and quantitative—performance parameters. Thus, sometimes it's best to select the simplest RF test equipment you can find for the purpose, rather than using more expensive gear.

Also, to avoid obtaining misleading or even false results requires that you know something about instrument limitations as well as "stray effects" that can introduce errors into your readings. Thus, you should regard any and all RF test measurements you make, especially those using simple instruments under non-laboratory conditions, with a healthy degree of informed skepticism. Be especially wary of SWR readings.

As we've shown, the subject of RF test equipment for radio amateurs is a complex one. But we've hopefully presented a fairly complete story on where RF measurement has been, where the state of the art lies now, and the direction in which it's headed. If you want to know more about RF test equipment suitable for radio hamshack and monitoring post use, one very good source is *The ARRL Antenna Book* ($20), especially Chapter 27, "Transmission-Line and Antenna Measurements." A second good bet is *The ARRL Handbook for Radio Amateurs* ($25), particularly Chapter 25, "Test Equipment and Measurements."

Amateur radio is more exciting than ever before, largely due to new technologies, and much of that excitement is apparent in the new-breed, sophisticated RF test equipment we've described. There's no doubt that the 1990's is the decade in which digitized, computerized, and convenience-oriented radio communications take off. ■

WIRE!

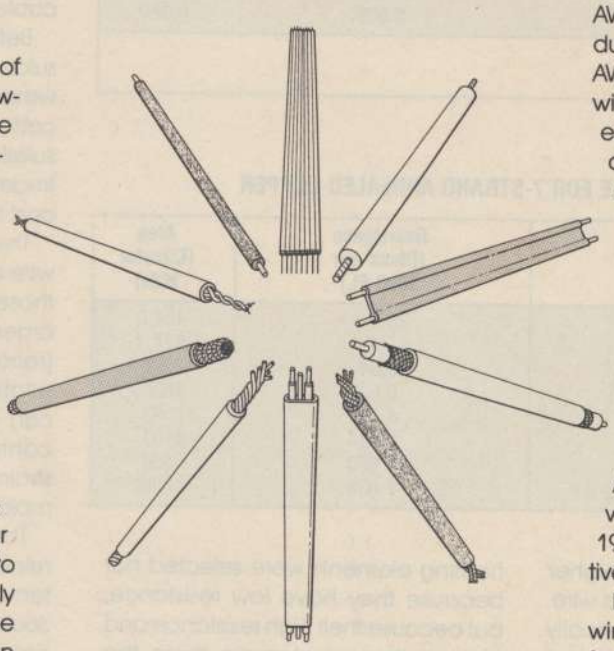

BY CHARLES HANSEN

Sure we all use wire in our projects, but do you know what its important characteristics are?

This article is about wire; the mundane stuff hidden in the walls of your house and buried within the sheet metal of your car as well as the exotic stuff that high-end audio manufacturers use in their component systems and interconnecting wire.

Webster defines "wire" as metal in the form of a thread or slender rod, usually very flexible, and circular in cross-section. However, wire can also be formed in rectangular, tubular, or other cross-sections for specialized applications. But before we get to more specialized wire, let's just discuss some of the basic characteristics of wire.

Wire Gauges. Single strands of round wire are made by a drawing process in which a ductile metal rod is reduced to the desired diameter by pulling it through progressively smaller hardened-steel die-blocks. The final diameter of copper, aluminum, and other conductors except steel is measured using the American Wire Gage (AWG) numbering system, which was devised by the Brown and Sharpe company. The gauge number originally denoted the number of passes a copper bar 0.3249 inches in diameter had to make through the progressively smaller die-blocks to produce the desired final diameter. An AWG-20 wire required 20 passes through the various die blocks.

A similar Brown and Sharpe numbering system is used for steel wire and twist drills, called the Steel Wire Gauge or SWG system. The sizes are different. At 20 degrees C, an AWG-20 copper wire is 0.032 inches in diameter. A #20 twist drill is 0.161 inches in diameter.

The AWG and SWG systems are not the only wire-gauge standards; the British Standard Gauge system provides a greater number of wire sizes than the Brown and Sharpe systems, ranging from 50 gauge (0.0010 inch diameter) through 00000000 (also denoted "8/0" and pronounced "eight-ought," which is 0.5 inches in diameter). Another system is the Birmingham or Stubbs' gauge. Each system has a different diameter for the same numeric wire gauge, so don't confuse them.

The American gauge numbers for solid wire vary from the smallest, AWG-40 (0.003145 inches diameter) through 0000 or 4/0, which is 0.46 inches in diameter. In the AWG system, wire effectively doubles in cross-sectional area for every three decreases in wire gauge number. So, AWG-20 wire has twice the area of AWG-23, and AWG-17 has twice the area of AWG-20. For sizes large than zero, each additional zero represents the same percentage increases in wire area as does one number increase for smaller gauge wires. For instance, 0000 gauge wire has twice the area of 0 gauge. Wire larger than 0000 is generally measured in thousands of circular mils (MCM). The next wire size above 0000 is 250 MCM or 250,000 circular mils. The properties for some single-conductor round copper wire of the American Wire Gauge type are given in Table 1.

Stranded Wire. To maintain a practical degree of wire flexibility, especially for large-diameter wire, stranding was created. Stranded wire is made up of a number of filaments of smaller wire gauges, which are twisted together to form an electrically equivalent larger wire gauge size.

Very flexible stranded wires might contain much smaller individual strands than AWG-40. These wires are given equivalent AWG numbers based on the reduction in area below that of AWG-40. For instance, a stranded wire with a cross-sectional area equivalent to AWG-20 solid wire can be composed of 7 strands of AWG-28 wire (common hook-up wire), 19 strands of AWG-32 wire (MIL-Spec wire), or 41 strands of AWG-36 wire (flexible test lead). These various types of stranded wire are designated by the quantity and size of the strands that make up the finished wire. The three AWG-20 equivalents above would be designated 7 × 28, 19 × 32, and 41 × 36, respectively.

If extra flexibility is required, the wire can be made in rope-lay fashion. Rope-lay wire consists of a central core surrounded by one or more layers of helically wound strands. AWG-20 rope-lay wire can be composed of up to 259 individual wires, such as 7 × 37/44, which uses a combination of AWG-37 and AWG-44 equivalent-gauge wires to achieve the required cross-section. The successive layers of a rope-lay wire can be alternately reversed (true concentric lay) or can all be wound in the same direction (unidirectional lay).

The finished diameter for stranded wire ends up larger than that of an equivalent solid wire. For example, solid AWG-20 wire is 0.032 inches in diameter, while 7 × 28 AWG-20 wire is 0.0363 inches in diameter. That is due to the air space in the stranding.

The resistance-per-unit length of

TABLE 1—CHARACTERISTICS OF STANDARD ROUND ANNEALED COPPER

Wire Gauge (AWG)	Diameter (Inches)	Resistance* (Ohms per 1000 Ft.)	Area (Circular Mils**)
40	0.0031	1049	9.9
38	0.0040	660	15.7
36	0.0050	155	25.0
34	0.0063	261	39.7
32	0.0080	164	63.2
30	0.0100	103	100.5
28	0.0126	65	159.8
26	0.0159	40	254.1
24	0.0201	25.7	404.0
22	0.0253	16.14	624.4
20	0.0320	10.15	1022
18	0.0403	6.385	1624
16	0.0508	4.013	2583
14	0.0641	2.525	4107
12	0.0808	1.588	6530
10	0.1019	0.999	10380

* At 20 degrees C.
** 1 circular. mil = 0.7854 square mils.

TABLE 2—WIRE TABLE FOR 7-STRAND ANNEALED COPPER

Wire Gauge (AWG)	Diameter (Inches)	Resistance (Ohms per 1000 Ft.)	Area (Circular Mils)
24	0.0255	28.4	404.0
22	0.0315	17.4	624.4
20	0.0363	10.54	1022
18	0.0456	6.636	1624
16	0.0576	4.172	2583
14	0.0726	2.624	4107
12	0.0915	1.650	6530
10	0.116	1.038	10380

stranded wire is also slightly higher than that of an equivalent solid wire. Since the wire strands are helically twisted, the length of each strand ends up longer than that of a solid conductor for the same length of wire. That extra strand length is called the take-up. Solid AWG-20 copper wire has a resistance of 10.15 ohms/1000 feet, while 7 × 28 stranded AWG-20 copper wire has a resistance of 10.54 ohms/1000 feet. Wire properties for 7-strand copper wire are given in Table 2.

Conductor Materials. Copper is the most common metal used for wire. Silver is a better conductor, but copper is much more cost effective. Aluminum wire costs less and offers a significant weight savings over copper for a given current carrying capacity, but requires special wire terminations. Other metals are also used for wire. The tungsten wire used in light bulbs and nichrome wire in heating elements were selected not because they have low resistance, but because their high resistance and high melting point make them the best choice for lighting and heating applications. Table 3 shows the relative resistances for different 20-gauge wires.

If plating is applied to the wire strands, this will affect the wire resistance, since plating adds several mils to the strand diameter. A 19 x 32 MIL-Spec AWG-20 wire has a resistance of 9.19 ohms/1000 feet with silver plating, 9.68 ohms/1000 feet with nickel plating, and 9.88 ohms/1000 feet with tin plating.

Wire Insulation. The purpose of a non-conductive wire covering is to electrically isolate the conductor, and to protect it against its environment. From an equipment-manufacturers' standpoint, insulation also allows colors, polarity patterns, and embossed printed information to be placed on

TABLE 3—20-GAUGE WIRE RESISTANCE

Material	Resistance (Ohms/1000 Ft.)
Silver	9.59
Annealed copper	10.15
Gold	14.4
Aluminum	16.7
Tungsten	32.4
Brass	41.2
Nickel	45.9
Iron	58.9
Steel	69.5
Nichrome	659

the wiring. Insulation materials are also selected to control the impedance of coax, twin-lead, and twinax cables.

Before plastics were developed, insulators were made of fibers such as waxed linen, varnish impregnated cotton, and asbestos. Modern wire insulation is molded, wrapped, or extruded from fibers, ceramics, rubber, and thermoplastics.

The insulating coatings for magnet wire are designed to be thinner than those of standard covered wire in order to maximize the space factor (ratio of copper to copper-plus-insulation) in the windings. Insulation can also be engineered to provide controlled stiffness and distributed strain relief, and to include integrally molded connectors or test probes.

The current rating of a wire is determined by its temperature rise. This temperature rise is caused by the Joule effect. The heat must be dissipated through the wire insulation. Thus it can be seen that the ideal insulator would be a material with infinite electrical resistance and zero thermal resistance. The amount of heat that the insulation can conduct to the outside of the cable depends on the insulating material, its wall thickness, the ambient temperature, the altitude, and the heat contribution of other current-carrying conductors if the wire is in a bundle or harness.

Table 4 shows the maximum permissible operating temperature for a number of insulating materials. Of course, higher temperature materials allow higher current flow in the conductor and so higher wire temperatures.

Wire Shielding. Wire shields are wound or braided over an inner insulated conductor to form a cylinder of

TABLE 4—MAXIMUM TEMPERATURES FOR INSULATION

Wire Type	Insulation Type	Chemical Name	Maximum Temp. (deg. C)
Covered	Latex rubber		60
	Heat-resistant rubber		75
	Varnished Cambric		85
	Cotton, silk, or linen		90
	Silicone rubber		90–200
	FEP Teflon	Fluoro-ethylene-prorylene	90–200
	Nylon	Polyamide	105
	PVC	Polyvinyl chloride	105
	Kynar	Polyvinylidene fluoride	110
	Asbestos		130
	Fiberglass		130
	Kapton	Polyimide	200
	Nomex	High-temperature Nylon	250
	TFE Teflon	TetraFluoro ethylene	250
Magnet	Enamel		80
	Formvar	Vinyl Acetate	105
	Soldereze	Polyurethane	105
	Nyleze	Nylon with polyurethane	130
	Silicon Enamel		180
	Thermaleze	Polyester	180
	ML	Polyimide	220

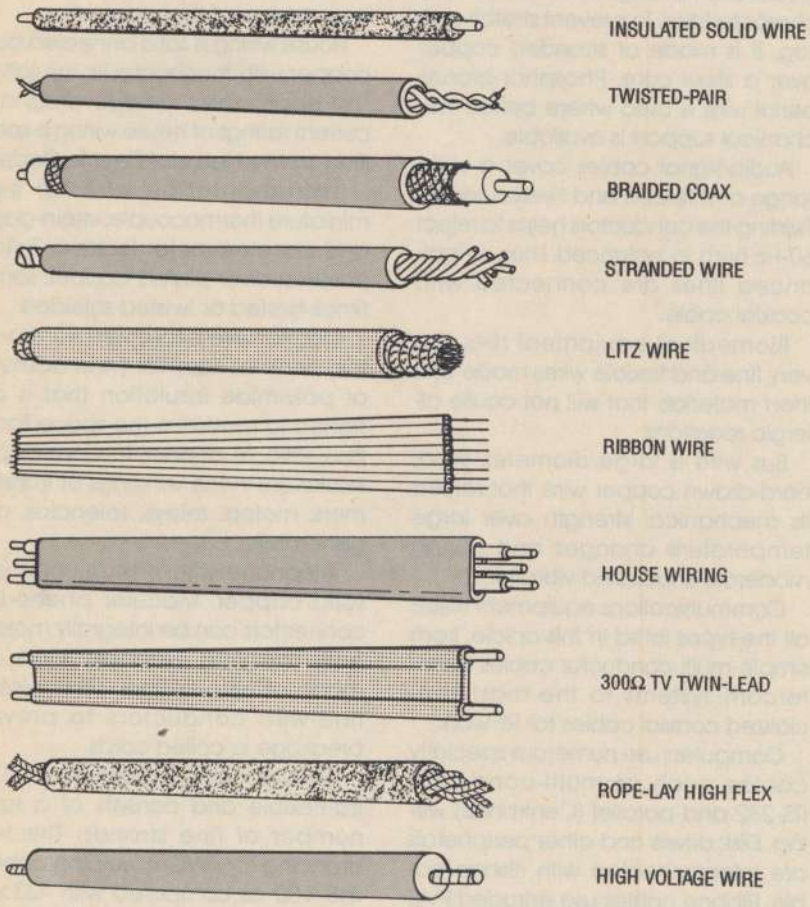

Fig. 1. The intended application of a wire determines the characteristics and form of a wire design. As you can see, there are quite a few different kinds of wire, all keyed to their particular use.

small copper wires arrayed in one or more layers. They are typically used to prevent RF energy from entering or leaving a coaxial cable. A high-quality braid provides at least 90% coverage of the inner cable, yet can be easily pushed back to allow connectors to be attached. Wound shields are cheaper, but less effective than braided shields.

Metal-foil tape provides a less effective RF shield than braid. It is lower in cost, but must be in contact with an uninsulated wire just under the insulation so the wire can be used for termination of the shield.

Characteristic Impedance. Every piece of wire has electrical properties that depend on the geometry of the wire, the conductor material, and the insulation used. When more than one wire is combined into a cable or harness, the interaction of AC signals flowing in the wires depends on the characteristic resistance, inductance, and capacitance between the parallel conductors. The characteristic impedance of a pair of wires of a given length is given by the formula

$$Z_o = \sqrt{(R + j\omega L)/(G + j\omega C)}$$

where R is the wire resistance, L is the series inductance, G is the shunt conductance, C is the shunt capacitance, and ω (omega) is $2\pi f$, where f is the frequency of the AC signal.

The wire insulation is the dielectric for the shunt capacitance. As is the case with discrete capacitors, not all insulating materials are suitable for cables. Where stable and predictable performance is required, more costly materials such as Teflon are used. For less demanding applications, the choice of insulating material is a compromise between performance, cost, and the installation environment.

The spacing of wire pairs also controls the characteristic impedances. Series inductance increases as wire pair spacing increases, and shunt capacitance decreases as wire pair spacing increases.

Skin Effect. In the discussion of characteristic impedance, it was assumed that the current density (current per unit area) is constant over the cross-sectional area of the conductor. This is only valid if the conductor is small, non-magnetic, and the frequency of the AC signal is low.

With large conductors or at higher frequencies, the current density becomes greater at the conductor surface and decreases toward the center. At very high frequencies, the

current is crowded into a very thin layer or "skin" near the wire surface. Thus the current crowding is called the "skin effect."

Skin effect is easier to understand if a solid conductor is thought to consist of a large number of parallel strands of very small wire. (As it turns out, the skin effect is essentially the same for a conventionally stranded wire as it is for a solid conductor of the same material and the same net cross-sectional area.) The voltage drop in each strand is determined by its resistance, which is essentially constant, and its inductance, which is proportional to the magnetic flux linking the strands. The outer strands are only linked to the internal flux, while the inner strands are linked to the flux of both the inner and outer strands. Thus the inner strands experience the highest inductive drop and therefore has the lowest current density. Thus, the skin effect increases with frequency and with conductor diameter.

Skin effect causes the effective resistance of the wire to increase because proportionally less copper area is available to carry the current as a result of the current crowding. It also causes the effective inductance of the wire to decrease because of the decrease in internal flux.

Litz Wire. In order to minimize the skin effect at any given frequency, a special stranded wire called Litz wire is used (see Fig. 1). Numerous articles have been written in the audio press debating the effectiveness of large-gauge audio interconnecting cables of silver or oxygen-free high-conductivity (OFHC) copper, using Litz-wire construction.

Litz is an abbreviation for *litzendraht*, which is German for stranded-wire. Litz wire is composed of separately insulated strands of very fine wire. It is wound so that every strand occupies, to the same extent, every possible position in the cross section of the wire. It is this special construction that differentiates Litz wire from conventional stranded wire. Litz stranding is designed to equalize the flux linkages, and therefore the inductive reactance, of each strand in the wire. This results in the current being distributed evenly among all the strands.

Litz wire is typically designed for a specific frequency range. AWG-28 strands may be used for frequencies under 1 kHz, while strands as small as AWG-48 are used for frequencies in the megahertz region. The goal of the Litz-wire designer is to make the resistance and reactance equal at the design frequency in order to maximize the Q of the cable. A sufficient number of strands of a selected size are then specified to carry the maximum design current.

Wire Applications. The applications for a type of wire are, of course, determined by its characteristics. Let's discuss some of the various types of wire the characteristics that make them suitable for their particular applications.

Antenna wire, for a start, is required to have high tensile strength in order to maintain a specified length for accurate tuning and frequency characteristics. To prevent stretch and sag, it is made of stranded copper over a steel core. Phosphor-bronze aerial wire is used where better mechanical support is available.

Audio-signal cables cover a wide range of shielded and twisted wiring. Twisting the conductors helps to reject 60-Hz hum in balanced lines. Unbalanced lines are connected with coaxial cable.

Biomedical equipment requires very fine and flexible wires made with inert materials that will not cause allergic reactions.

Bus wire is large-diameter, solid, hard-drawn copper wire that retains its mechanical strength over large temperature changes and during moderate shock and vibration.

Communications equipment utilize all the types listed in this article, from simple multi-conductor cables for intercom systems to the most specialized coaxial cables for RF work.

Computers use numerous specialty cables, such as multi-conductor RS-232 and parallel (Centronics) wiring. Disk drives and other peripherals are interconnected with ribbon cable. Ribbon cabies use extruded PVC insulation to make them compatible with mass-termination connectors and for easy conductor separation. The miniature conductors used in disk-drive heads are built of special alloys and insulators to withstand severe flex-life requirements and to maintain their critical mutual capacitance. Network cables must also maintain their characteristic impedance for high data-transfer rates and noise rejection, and low transmission losses and crosstalk.

Ground strap is braided copper wire used for flexible ground connections. It may be tin-plated to allow easy soldering to equipment chassis, and may be insulated.

High-temperatures require a nickel-clad copper wire, covered with inorganic silicone-glass, ceramic, or vitreous silica braided insulation.

High-voltage wire is heavily insulated with silicone rubber, polyurethane, or polyethylene. Teflon can provide additional corona resistance.

Hook-up or chassis wire is made of solid or stranded annealed copper. Wire strands may be left bare or tinned for good solderability. Insulation can be neoprene, silicone rubber, or any number of thermoplastics.

House wiring is solid annealed bare copper with thermoplastic insulation. The application, voltage drop, and current ratings of house wiring is specified by the National Electric Code.

Instrumentation wire for subminiature thermocouple, strain-gage, and accelerometer leads is Teflon-covered silver-plated copper, sometimes twisted or twisted-shielded.

Magnet wire is solid wire with a very thin enamel, Formvar (vinyl acetate), or polyimide insulation that is designed to maximize the space factor (the ratio of copper to copper plus insulation) in the windings of transformers, motors, relays, solenoids, and generators.

Telephone wire is multi-conductor solid copper. Modular phone-line connectors can be integrally molded onto the wire. Handset wires are made of ultra-flexible, silver-plated, fine-wire conductors to prevent breakage in coiled cords.

Welding cable is required to be extra-flexible and consists of a large number of fine strands. The wire stranding for AWG-4 welding cable is 418×30 as compared with 133×25 for conventional cable.

Wire-wrap wire must maintain its circuit contact integrity on the edges of wire-wrap pins. It is often made from silver-plated, solid oxygen-free, high-conductivity copper and insulated with Kynar. ■

Learn the theory behind phase-locked loops, how they work, and how you can use them in your own designs.

BY ROBERT A. YOUNG

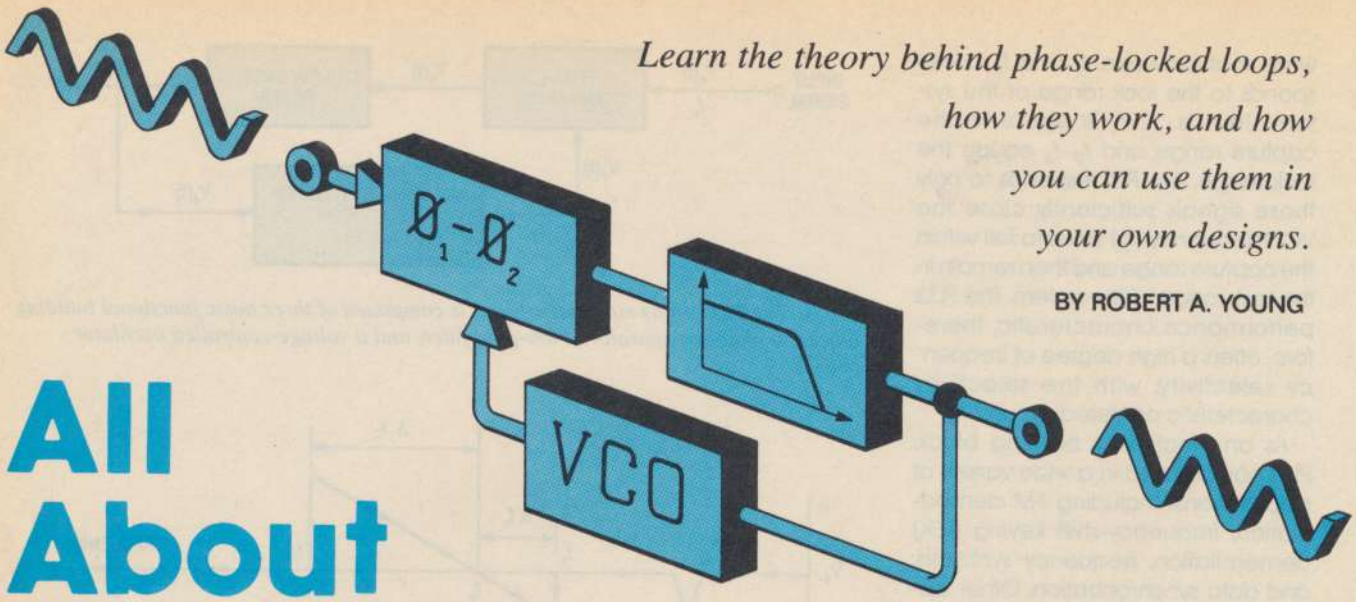

All About Phase-Locked Loops

Since the phase-locked loop (PLL) was reduced to a single IC package, it has had a significant affect on electronics design. The phase-locked loop provides frequency-selective tuning and filtering without the need for coils or inductors. As shown in Fig. 1, the PLL, in its most basic form, is a feedback system comprised of three basic functional building blocks: a phase comparator, a low-pass filter, and a voltage-controlled oscillator (VCO).

PLL Operation. The PLL's basic principle of operation can briefly be explained as follows: With no signal applied to the PLL input, no error voltage (V_e) is generated; *i.e., the error voltage is zero. Under that condition the VCO operates at a fixed frequency,* f_o—which is known as the "free-running frequency." If, on the other hand, a signal is applied to the input of the PLL, the phase comparator compares the phase and frequency of the applied signal to the frequency of the VCO output (f_o), and if there is a difference between the two signals, generates a voltage (known as the error voltage) that is proportional to the phase and frequency difference. That error voltage is then low-pass filtered and applied to the control input of the VCO; the application of the error voltage to the control input of the VCO causes the VCO to adjust its operating frequency until its output equals that of the input signal. Thus, small changes in the input signal are sensed by the phase comparator, and the VCO is adjusted accordingly.

If, however, the input frequency (f_s) is sufficiently close to the output of the VCO (f_o), the feedback causes the VCO to synchronize with (or lock onto) the incoming signal. Once in lock, the VCO generates a signal with a frequency that is identical (with the possible exception of a very small fixed phase difference) to the input signal.

Operating Ranges. Two key parameters of a PLL system are its lock and capture ranges. The lock range—also known as the tracking or holding range—is defined as the range of frequencies in the vicinity of f_o over which the PLL can maintain a lock with an input frequency. The lock range increases as the overall gain of the PLL is increased.

The capture range—which is also known as the acquisition range—is defined as the band of frequencies in the vicinity of f_o where the PLL can establish or acquire a lock with the input signal. The capture range is always smaller than the lock range, and is related to the low-pass filter's bandwidth, and thus it decreases as the low-pass filter's bandwidth (or time constant) is reduced.

The lock and capture ranges of a PLL are illustrated in Fig. 2, which also shows the frequency-to-voltage characteristic of a PLL. In that figure, the input is assumed to be a signal that is slowly swept over a broad frequency range. The vertical scale corresponds to the loop-error voltage (V_d).

In the upper part of Fig. 2, the input frequency (f_s) is being gradually increased. The loop does not respond to the frequency change until the frequency reaches f_1, which corresponds to the lower limit of the capture range. Upon reaching f_1, the loop suddenly locks onto the input, causing a negative jump in the loop-error voltage. At that point, V_d (the loop-error voltage) varies linearly with changes in input frequency. In the graph, this creates a line with a slope equal to the reciprocal of the frequency-to-voltage conversion gain. The line goes through zero when f_s equals f_o. The loop will continue to track the input frequency until it reaches f_2, which corresponds to the upper frequency limit of the lock range. The PLL then loses lock, and the error voltage drops to zero.

If the input frequency is then slowly swept back down, the graph of the error voltage will look like that in the bottom half of Fig. 2. The loop recaptures the signal at f_3, and traces it down to f_4. The frequency spread between f_1 and f_3 is the capture range,

while that between f_2 and f_4 corresponds to the lock range of the system. That is, f_3–f_1 is equal to the capture range and f_2–f_4 equals the lock range. The PLL responds to only those signals sufficiently close the VCO frequency (f_o) so as to fall within the capture range and then remain in the lock range of the system. The PLL's performance characteristic, therefore, offers a high degree of frequency selectivity, with the selectivity characteristic centered around f_o.

As an electronics building block, PLL's can be used in a wide variety of applications, including FM demodulation, frequency-shift keying (FSK) demodulation, frequency synthesis, and data synchronization. Other applications of the PLL include AM detection, tone detection, motor speed control, and stereo decoding.

FM Demodulation. In FM demodulation, the PLL is locked onto the input FM signal, and the loop-error voltage ($V_d(t)$ in Fig. 1), which keeps the VCO locked onto the input signal, represents the demodulated output signal. Since the system responds to only those input signal frequencies that are within the PLL's capture range, it also provides a high degree of selectivity. In most PLL applications, the quality of the demodulated output (*i.e.*, its linearity and signal-to-noise ratio) is superior to that of other discriminators.

For this application, there are three performance parameters that should be considered: the quality of the demodulated output (which is normally measured in terms of output level, distortion, and the signal to noise ratio for a given FM deviation), the VCO-frequency range (which for reliable operation, should be 20% above the FM-carrier frequency) and stability (especially important if a narrow-band filter is used ahead of the PLL), and the detection threshold (which determines the minimum signal level required for the PLL to lock onto and demodulate an FM signal of a given deviation). In most FM-demodulation applications, it is also desirable to control the amplitude of the demodulated output. Some PLL IC's provide that feature via a variable-gain amplifier within the chip.

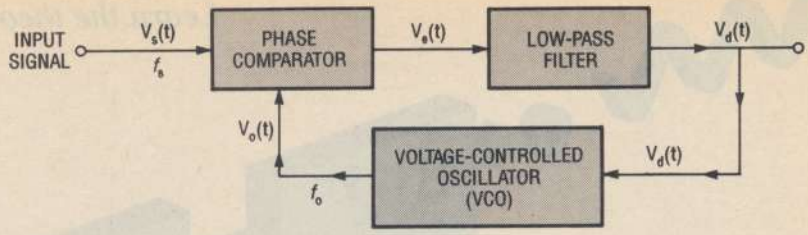

Fig. 1. The PLL, in its most basic form, is comprised of three basic functional building blocks: a phase comparator, a low-pass filter, and a voltage-controlled oscillator (VCO).

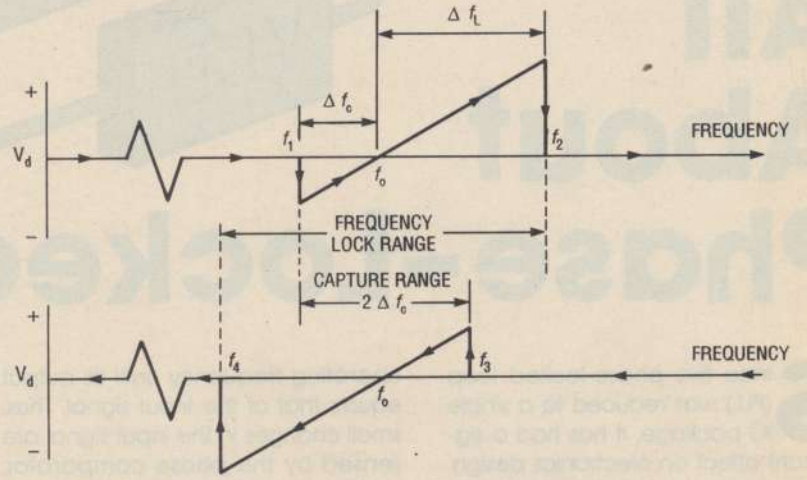

Fig. 2. Illustrated here are the lock and capture ranges of a PLL as well as its frequency-to-voltage characteristics. The vertical scale corresponds to the loop-error voltage.

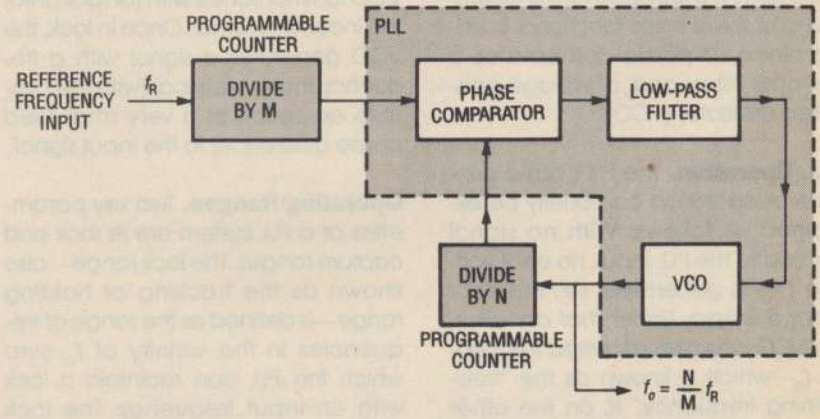

Fig. 3. The PLL can be used to generate new frequencies from a stable reference source by either frequency multiplication and division, or transition.

FSK Demodulation. In FSK demodulation (which is frequently used to transmit digital information over the telephone lines), the carrier signal is shifted between two discrete frequencies to encode the binary data. When the PLL is locked onto the input signal (tracking the shifts in the input frequency), the error voltage within the loop converts the frequency shifts back into logic pulses.

Frequency-shift keying as it is used in digital communication is very similar to analog-frequency modulation. Thus, any PLL can be used for FSK demodulation so long as its input sensitivity and tracking range are sufficient for a given frequency deviation.

Some of the requirements and desirable features for a PLL when used for FSK decoding are center-frequency stability, logic-compatible outputs,

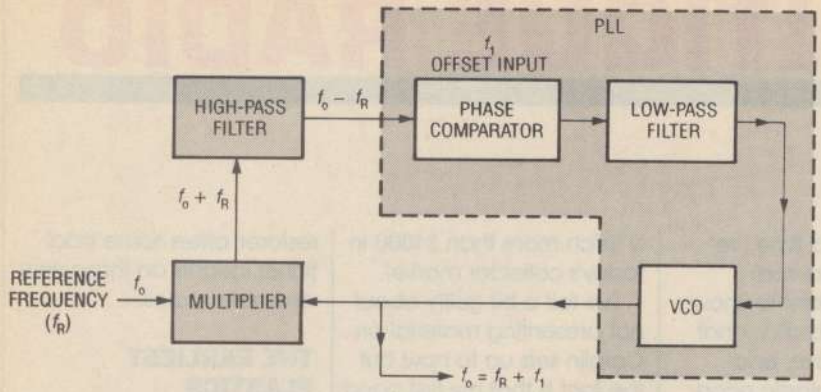

Fig. 4. By adding a multiplier and an additional low-pass filter to the PLL as shown here, it is possible to form a frequency-translation loop.

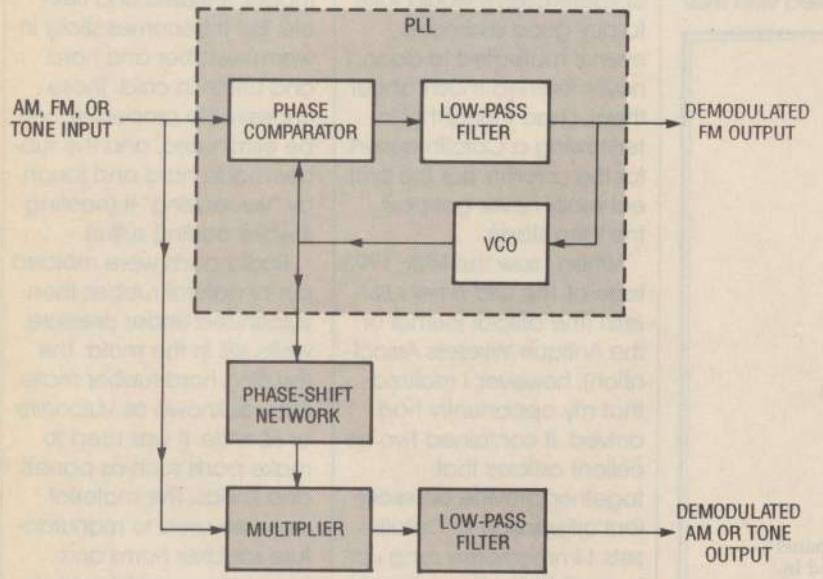

Fig. 5. The basic PLL circuit can be converted to a synchronous amplitude-modulation (AM) detector by adding a non-critical phase-shift network, an analog multiplier, and an external low-pass filter to the basic system.

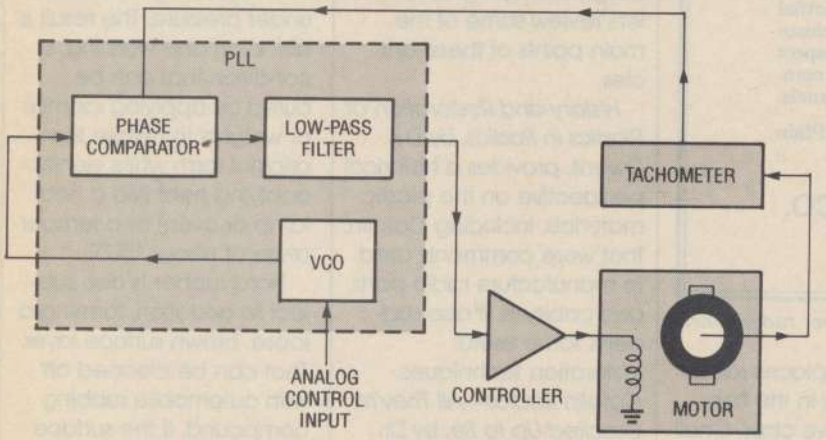

Fig. 6. In motor-speed control applications, the VCO section of the PLL is separated from the phase comparator and used to generate a voltage-controlled reference frequency.

and control of VCO conversion gain. The center-frequency stability is important to ensure that the VCO-frequency range stays within the signal band over the entire operating-temperature range. A logic-compatible output helps a designer avoid having to use an external voltage comparator (chopper) to square the output pulses. Although for communication circuits it is sometimes even more convenient if the output conforms to the RS-232C logic standard, thereby eliminating the need for a separate RS-232 compatible line-driver. Control of the VCO's conversion gain allows the circuit to be used for both large-deviation FSK signals (such as 1200-baud operation) as well as small deviation (75-baud) FSK signals.

Frequency Synthesis. The PLL can be used to generate new frequencies from a stable reference source by either frequency multiplication and division, or transition. Figure 3 shows a typical frequency multiplication and division circuit using a PLL and two programmable counters. In that application, one of the counters is inserted between the VCO and the phase comparator, effectively dividing the VCO frequency by the counter's modulus (N). When the system is in lock, the VCO output is related to the reference frequency (f_R) by the counter moduli M and N as:

$$f_o = (N/M)\, f_R$$

By adding a multiplier and an additional low-pass filter to the PLL (see Fig. 4), it is possible to form a frequency-translation loop. In that application, the VCO output is shifted from the reference frequency (f_R) by an amount equal to the offset frequency, f_1; *e.g.*, $f_o = f_R + f_1$.

Frequency synthesis requires that the path between the VCO output and the phase-comparator input be opened, so that an external frequency divider can be inserted into the feedback loop of the PLL.

Data Synchronization. In data synchronization, the PLL is used to extract synchronization from a composite signal or used to synchronize two data streams or system clocks to the same frequency reference. Such applications are useful in PCM (pulse-code

(Continued on page 94)

ANTIQUE RADIO

By Marc Ellis

From Hard Rubber to Catalin

From time to time I receive letters from readers who want to know more about Catalin—that highly decorative, and highly prized, plastic occasionally used for radio cabinets beginning in the mid 1930's. The deep glowing colors typical of Catalin cabinets, coupled with their relative rarity, places radios sporting them in the fiendishly expensive class. Small Catalin table models that were priced at less than $20.00 when new can easily fetch more than $1000 in today's collector market.

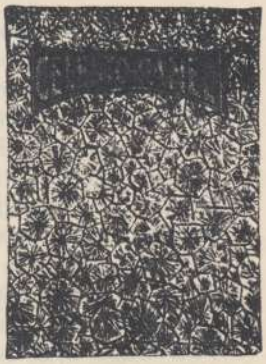

CELESTO
"SHADOW BLACK"

THIS is the most beautiful radio panel ever developed! All the unsurpassed insulating qualities of genuine Hard Rubber—and striking beauty besides—because CELESTO Panels are genuine Hard Rubber.

SHADOW BLACK Celesto Panels cannot scratch; they cannot show finger marks.

No illustration can convey to you the actual beauty of SHADOW BLACK Celesto Panels. Go to your dealer today and inspect them! And remember that he stocks a complete line of the standard CELESTO Panels.

CELESTO Panels are also made in Plain Black and Mahogany.

CELESTO RUBBER CO.
68-74 South St., Boston

This mid-1920's ad hypes the virtues of hard-rubber radio panels.

I've felt a bit guilty about not presenting material on Catalin sets up to now, but the fact is that my first-hand knowledge of the subject is fairly meager. Never having been driven to buy Catalin radios, and without the kind of spare cash it would take to buy good examples even if motivated to do so, I never learned much about them. I had thought of interviewing a Catalin expert for the column, but the project really never got past the idea stage.

When I saw the May, 1993 Issue of *The Old Timer's Bulletin* (the official journal of the Antique Wireless Association), however, I realized that my opportunity had arrived. It contained two excellent articles that, together, provide an excellent orientation to Catalin sets. I immediately rang up Ludwell Sibley, the editor of OTB, and asked if it would be possible for me to share some of the information with readers of this column. He graciously agreed, so let's review some of the main points of these articles.

History and Restoration of Plastics in Radios, by D.K. Owens, provides a historical perspective on the plastic materials, including Catalin, that were commonly used to manufacture radio parts and cabinets. It also suggests some useful restoration techniques. *Catalin Radios—All They're Cracked Up to Be*, by Dr. David Mednick, written more from the point of view of the collector than the restorer, offers some additional insights on these very desirable radios.

THE EARLIEST PLASTICS

Owens tells us that the earliest "plastic" used in radio manufacture was hard rubber. In its natural form, rubber is elastic and flexible. But it becomes sticky in warm weather and hard and brittle in cold. Those undesirable properties can be eliminated, and the rubber made hard and tough, by "vulcanizing" it (heating it while adding sulfur).

Radio parts were molded out of natural rubber, then vulcanized under pressure while still in the mold. The resulting hard rubber material was known as *Vulcanite* or *Ebonite*. It was used to make parts such as panels and knobs. The material was also used to manufacture speaker horns and bayonet-mount tube sockets such as those used in early Crosley radios.

Over the years, hard rubber tends to creep or cold-flow, especially when kept under pressure. The result is distortion and warping, a condition that can be cured by applying clamps or weights to restore the original form while gently applying heat (via a heat lamp or oven) at a temperature of about 150°F.

Hard rubber is also subject to oxidation, forming a loose, brown surface layer. That can be cleaned off with automobile rubbing compound. If the surface originally had a shiny finish, follow up with an application of auto polish (or, if

deterioration was extreme, substitute a coat of clear lacquer such as "Krylon.")

Owens goes on to tell us that the first true plastics were cellulose derivatives. Cotton treated with nitric acid formed a hard, colorless, infusible material known as *Pyroxylin*. When heated with camphor to plasticize it, Pyroxylin became *Celluloid*—which could be melted and molded into any desired shape.

Celluloid had only limited use in radio construction because it was highly flammable and could be set off by the tiniest spark. It was, however, sometimes used to make speaker horns.

Acetate was a much safer cellulose derivative made by reacting cotton with acetic acid, then treating with plasticizers. Its properties were very similar to those of Celluloid, but without the extreme fire hazard. The material could be left clear or colored to any desired shade.

Acetate was widely used during the 1930's to make dial escutcheons, knobs, pushbuttons, decorative trim, and dial windows. Unfortunately, those parts often did not age well. Because of evaporation of the plasticizers over the years, they tended to shrink, warp, and crack. Dial windows yellowed due to the effects of light and heat.

The radio restorer can't do much to remedy this damage. Scratches and scuffs, however, can be buffed out with plastic polish. Be gentle when working with the dial windows, though. Most have become very brittle with age!

Cracks can be repaired with an acetone-based cement such as Duco. Use a minimum of cement, and watch where you let it drip because it will permanently mar an acetate surface.

Atwater Kent Condenser

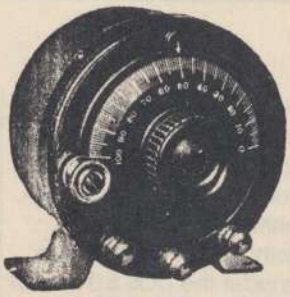

No. 4270

The remarkable degree of precision in adjustment of this condenser is obtained through the extreme smoothness of operation together with a friction type of Vernier. An accurately ground steel shaft and self-aligning bronze cone bearings are used.

The workmanship and material throughout is of the highest possible grade. It is ruggedly built to give permanent satisfaction. Electrical losses have been reduced to a minimum.

Old-Timer's Bulletin author D.K. Owens considers Atwater-Kent subassemblies such as this to be among the finest examples of the use of Bakelite in radio parts.

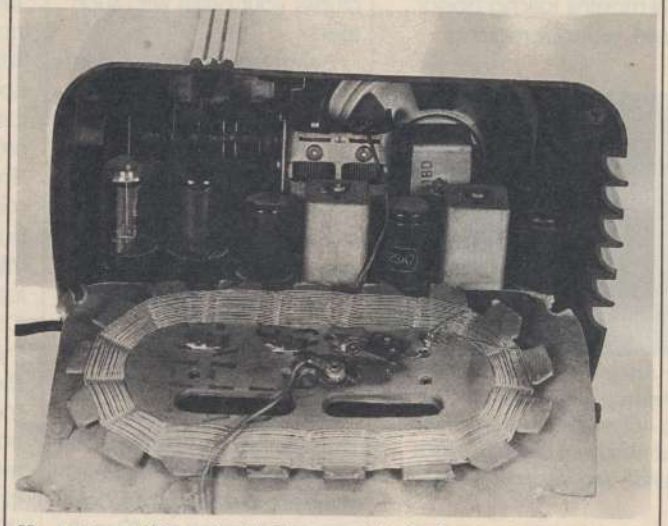

Heat given off by tubes built up rapidly in the confined spaces of small AC-DC table models. Bakelite's resistance to high temperatures made it the cabinet material of choice.

BAKELITE

The first truly "man-made" (synthesized from chemicals rather than derived from natural substances) plastic was named *Bakelite* after its inventor Leo Baekeland. It was made by combining and heating phenol and formaldehyde.

Bakelite represented a quantum leap forward in the development of plastic materials. For one thing, once molded, it became inert and infusible. The finished product was dimensionally stable, extremely resistant to heat, and unaffected by common solvents.

Bakelite could be readily molded into intricate shapes having a beautifully polished finish. Owens credits the sockets, filament rheostat housings, and other subassemblies made by Atwater Kent in the 1920's as being some of the finest molded Bakelite pieces made.

In the mid 1930's, Bakelite came into its own as a radio-cabinet material. It was less expensive than wood and could be readily molded into the flowing, stylish shapes that were becoming popular during that era. Its thermal resistance made it very suitable for use in AC-DC table models, which typically ran very hot because of the high tube temperatures and limited interior space.

Being naturally dark in color, Bakelite could not be easily tinted. That's why Bakelite cabinets are usually brown or black. Manufacturers who wanted bright colors had to resort to paint.

Depending on storage conditions, Bakelite cabinets may dull with age. Luster can be restored with polishing compound and wax. In extreme cases of deterioration, try a coat of Krylon.

Because Bakelite is so inert, it may be cleaned with almost any solvent. And there's no problem using paint remover to strip a chipped or stained painted finish in preparation for respraying. Bakelite doesn't take adhesives well, but the epoxies seem to do about the best job in repairing cracks or breaks.

CATALIN

Catalin is a close chemical relative of Bakelite. Unlike Bakelite, however, it is a liquid in its raw form and is very light in color. The liquid may be tinted in a variety of bright colors, giving finished cabinets the rich glowing look that makes them so popular today.

Catalin cabinets were made by a casting process, in which the liquid was poured into the mold and then set by heat. That differs from the *molding* process (involving the use of both heat and pressure) used to liquefy and form Bakelite.

Catalin surfaces degrade more readily than Bakelite,

(Continued on page 85)

COMPUTER BITS

By Jeff Holtzman

Real Programmers Do Use BASIC

I used to believe that real men (and women) don't program in BASIC. But I was wrong. The past few months, I've been playing with Microsoft's Visual BASIC (VB) programming environment and Access database management system, and I'm really impressed with both. (Access uses a VB-like system for creating the user interface and for coding.) So I'd like to spend the next few months talking about these groundbreaking products. We'll start this time with an overview of why these products exist, and then talk specifically about Visual BASIC.

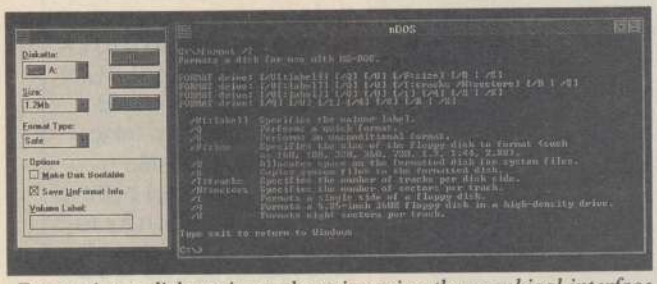

Formatting a diskette is much easier using the graphical interface on the left (courtesy of the Norton Desktop for Windows) than the DOS command line with its plethora of command-line switches. Today's generation of visual-oriented programming tools (like Visual BASIC) let you build user-friendly interfaces in a snap.

SOPHISTICATION AND SIMPLICITY

In traditional, procedural programming languages (*e.g.*, C, Pascal, FORTRAN, GW-BASIC), it is the program that is in control; the user must react to the program. On the other hand, in today's visual environments (*e.g.*, Windows, Macintosh, X-Windows), the user is in control; it is the program that must react to the user.

The problem is that the difficulty of programming graphical user interfaces (GUI's) often increases exponentially with the sophistication of the user interface. Paradoxically, sophistication means simplicity of use. For example, consider the DOS 5.0 format command. It has eleven possible command-line parameters, some of which have as many as eight possible values. Can you name all the (legal) combinations? Do you really want to clutter your brain with such trivia?

A GUI-based format command would present the choices visually, and not force you to remember irrelevant information. Otherwise it would be like making you recite spark-plug gap and distributor-timing angle before allowing you to drive your car.

Coding up a friendly user interface used to involve so much work that it was seldom done. Fortunately, due to the emergence of GUI-builders, like VB, those days are gone for good. Friendly user interfaces also require lots of CPU power, but today that's no longer a consideration either.

VB/WIN

I've been using Version 2.0 of Microsoft's Visual BASIC for Windows; the company also makes a comparable (if not wholly compatible) DOS version. What's so great about VB/Win? It takes programming out of the macho-man (witchy woman?) realm, and makes it accessible to those of us without the time or inclination to learn 1000+ Windows API (*A*pplication-*P*rogramming *I*nterface) calls in C or C+. It's part of a broader movement in the computer industry toward greater applications-building power for end users.

In VB/Win, everything is built around forms and controls. The main window of an application, as well as any subsidiary forms or dialog boxes it might call up, is a form. Each form may contain various controls: command buttons (*e.g.*, "OK" and "Cancel"), text-input fields, radio buttons (for choosing one of several options), check boxes (for turning something on or off), and many, many more. (There is, in fact, a whole mini-industry dedicated to building and selling special VB/Win controls; there is also lots of related shareware.) Controls have properties that specify things like size, shape, position, color, and more, depending on control type. In fact, the manual lists 170 properties applicable across just the 29 standard control types. Don't be overwhelmed by that number; few controls have more than about 25 or 30 properties.

You don't, in the traditional sense, "write" a VB program. Rather, you design a user interface and then add code that responds to events associated with each control.

Designing the user interface depends mostly on your ability to understand how the user will interact with the program. Generally speaking, the fact that a program has a WIMP (Windows, Icons, Menus, Pointing device) interface doesn't guarantee that it's

(Continued on page 76)

CIRCUIT CIRCUS

By Charles D. Rakes

Saftey First

We've been meeting here for several years now and I think it's about time that we conducted a forum on electronic safety. So this time around, we'll share a few circuits that deal with just that subject.

Long ago, when we had just a few simple tools to work with, "Murphy" was close at hand to see that some body part got between the tool and an immovable object. The resulting injury, in most cases, probably was not life threatening and, after a time, things returned to normal. But with today's high-tech metal-crunching machines, there's no place for even the slightest error. Your first mistake could literally be your last. Machines just don't care what, or who, they mangle.

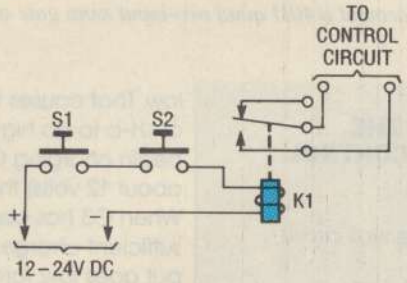

Fig. 1. The simple two-hand safety-control switch shown here is little more than two pushbutton switches connected in series so that both must be depressed in order to energize the relay.

A SIMPLE SAFETY SWITCH

A good number of the small-parts stamping and molding machines that are still in use today are electrically controlled by the operator. The operator puts a part in place and then, by operating hand-control switches, sends a signal to the machine to complete the cycle. Since both hands are out of harm's way holding down the hand-control switches, the machine operates safely.

Figure 1 shows a simple two-hand safety-control switch that is still used in some manufacturing facilities. On the surface, the circuit fulfills the basic safety need by requiring that two switches be closed before the machine will operate. That's just fine and dandy. But when an operator does piecework, ingenuity gets in the way of safety.

By placing something heavy on one of the switches, the machine can be operated with one hand, leaving the other hand free to speed up the operation by putting the next part in place a little sooner. Hands, fingers, and other body parts have been lost that way—certainly not good for the operator, the company, or the insurance company.

IMPROVED SAFETY CIRCUIT

An improved safety circuit, which eliminates the operator's ability to defeat the safety feature, is shown

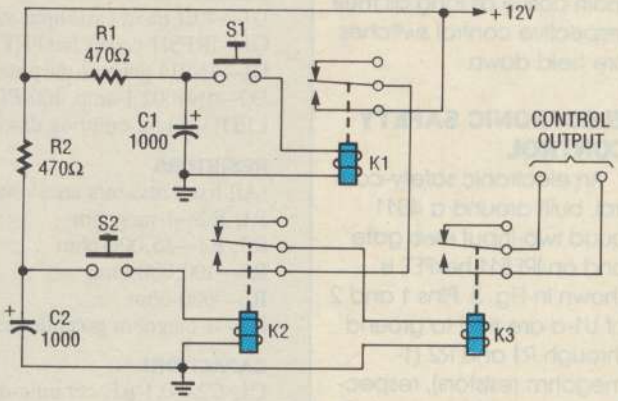

Fig. 2. This safety control switch offers an improvement over the previous on in that S1 and S2 must be depressed at about the same time to power the load circuit.

PARTS LIST FOR THE SIMPLE SAFETY SWITCH

S1, S2—Normally open pushbutton switch
K1—SPDT AC or DC relay
Wire, solder, hardware, etc.

PARTS LIST FOR THE IMPROVED SAFETY CIRCUIT

C1, C2—1000-µF, 16-WVDC, electrolytic capacitor
K1–K3—12-volt DC relay with 100–150-ohm coil
R1, R2—470-ohm, 1-watt, 5% resistor
S1, S2—Normally open pushbutton switch
Perfboard materials, 12-volt source, wire, solder, hardware, etc.

in Fig. 2. That circuit requires that each hand switch be operated at about the same time to produce a machine control output. The two large electrolytic capacitors (C1 and C2) are charged to 12 volts through two current-limiting resistors (R1 and R2). If both S1 and S2 are closed at the same time, the normally open contacts of relays K1 and K2 close momentarily, causing K3's (the control relay's) normally open contacts to close.

The control relay's on-time is controlled by C1 and C2, so fine tuning the output time period isn't exactly an easy job. In addition, R1 and R2 must be selected to limit current to less than K1 and K2's holding current, otherwise, the relay will remain active as long as their respective control switches are held down.

ELECTRONIC SAFETY CONTROL

An electronic safety-control, built around a 4011 quad two-input NAND gate and an IRF511 hexFET, is shown in Fig. 3. Pins 1 and 2 of U1-a are tied to ground through R1 and R2 (1-megohm resistors), respectively, causing U1-a's output at pin 3 to go high. That output is fed to both inputs of U1-b (which is configured as an inverter), forcing its output (at pin 4) low. That means that the voltage across C3 is nearly zero. With nearly zero volts across C3, the input to U1-c is low, forcing its output high, which, in turn, pulls the input to U1-d high. With U1-d's input high, its output goes low, which keeps LED1 dark and Q1 cut off.

If S1 and S2 are closed at the same time, or within about 200 milliseconds of each other, both inputs to U1-a go high simultaneously, forcing its output (at pin 3)

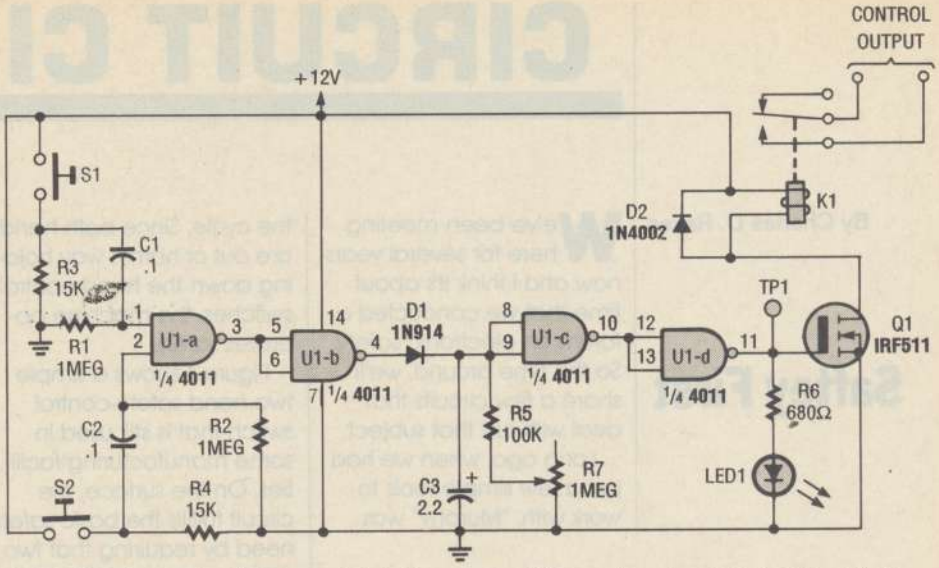

Fig. 3. The electronic safety-control is built around a 4011 quad two-input NAND gate and an IRF511 hexFET.

PARTS LIST FOR THE ELECTRONIC SAFETY CONTROL

SEMICONDUCTORS
U1—4011 quad two-input NAND gate, integrated circuit
Q1—IRF511 power hexFET
D1—1N914 general-purpose silicon signal diode
D2—1N4002 1-amp, 100-PIV, silicon rectifier diode
LED1—Light-emitting diode

RESISTORS
(All fixed resistors are ¼-watt, 5% units.)
R1, R2—1-megohm
R3, R4—15,000-ohm
R5—100,000-ohm
R6—680-ohm
R7—1-megohm potentiometer

CAPACITORS
C1, C2—0.1-µF, ceramic-disc
C3—2.2-µF, 16-WVDC, electrolytic

ADDITIONAL PARTS AND MATERIALS
K1—12-volt DC relay
S1, S2—Normally open pushbutton switch
Perfboard materials, enclosure, 12-volt power source, wire, solder, hardware, etc.

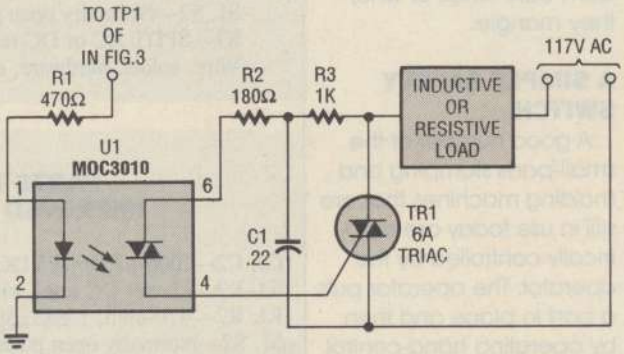

Fig. 4. The relay-replacement circuit (shown here) can be used to operate inductive or resistive loads.

low. That causes the output of U1-b to go high, and begin charging C3 (to about 12 volts) through D1. When C3 has absorbed a sufficient charge, U1-c's output goes low, forcing the output of U1-d high. That high causes LED1 to light, and Q1 to turn on, providing a ground path for K1, causing it to turn on. The relay remains active until C3 discharges to a level below U1-c's cutoff voltage. Resistor R7, the 1-megohm potentiometer, sets C3's discharge rate. The 200-millisecond response (or switch closure) time can be lengthened by increasing the values of C1 and C2 or increasing the values of R1 and R2.

RELAY REPLACEMENT

The most common failure in electronics can usually be traced to a mechanical device like a relay or mechanical switch. So anytime you can avoid using a relay in a circuit, you will be saving headaches down the road.

The circuit in Fig. 4, which can be used to operate inductive or resistive loads, can take the place of the relay in Fig. 3. When the

PARTS LIST FOR THE RELAY REPLACEMENT

SEMICONDUCTORS
U1—MOC3010 Triac-driver optoisolator/coupler
TR1—6-amp, 400-PIV Triac

RESISTORS
(All fixed resistors are ¼-watt, 5% units.)
R1—470-ohm
R2—180-ohm
R3—1000-ohm

ADDITIONAL PARTS AND MATERIALS
C1—0.22-µF, 600-WVDC, ceramic-disc capacitor
Perfboard materials, 117-volt AC power source, wire, solder, hardware, etc.

PARTS LIST FOR THE TIMED SAFETY CIRCUIT

SEMICONDUCTORS
U1, U2—MC14538B dual retriggerable monostable multivibrator, integrated circuit
Q1—2N3906 general-purpose PNP silicon transistor
Q2—IRF511 power hexFET

RESISTORS
(All fixed resistors are ¼-watt, 5% units.)
R1, R2—220,000-ohm
R3, R4—15,000-ohm
R5–R8—100,000-ohm
R9, R10—47,000-ohm
R11–R13—1-megohm potentiometer

CAPACITORS
C1, C2—0.1-µF, ceramic-disc
C3, C4—0.47-µF, ceramic-disc
C5—2.2-µF, 16-WVDC, electrolytic

ADDITIONAL PARTS AND MATERIALS
S1, S2—Normally open pushbutton switch
Perfboard materials, 12-volt power source, wire, solder, hardware, etc.

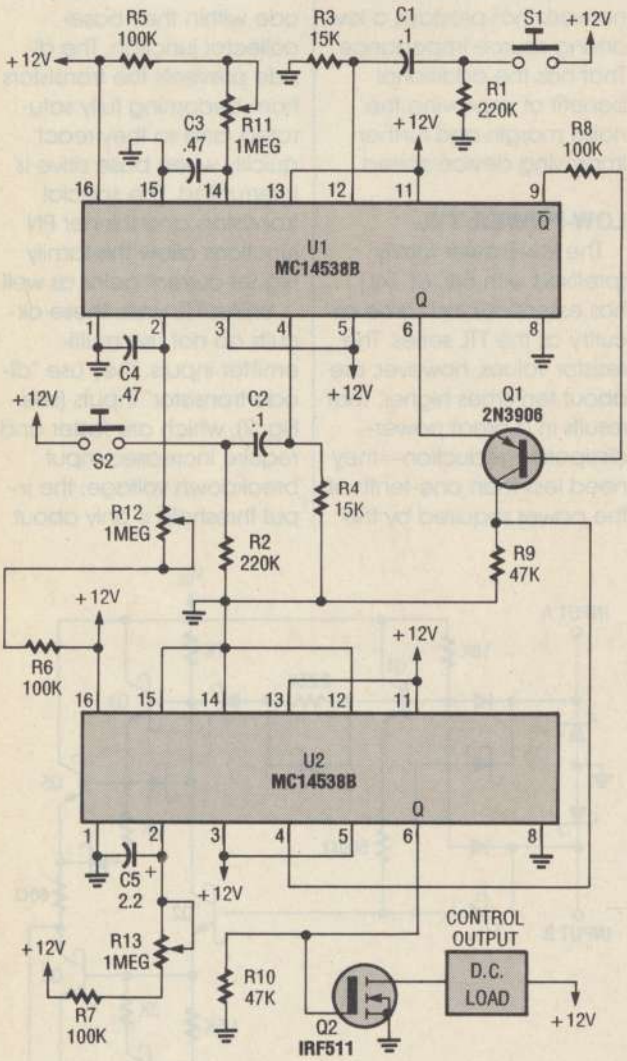

Fig. 5. The timed safety circuit, built around a pair of MC14538B dual retriggerable monostable multivibrators, makes S1 and S2 individually adjustable.

voltage at TP1 in Fig. 3 goes high, the internal LED of U1 (an MOC3010 Triac-driver optoisolator/coupler) in Fig. 4 turns on. That causes U1's Triac-driver output to turn on, supplying gate current to TR1 (a 6-amp, 400-PIV Triac), turning it on. The Triac, in turn, supplies power to the load circuit.

TIMED SAFETY CIRCUIT

A more versatile safety circuit is shown in Fig. 5. In that circuit, two MC14538B dual retriggerable monostable multivibrators provide individual adjustments for each input switch and control the output circuitry. Those features allow the safety circuit to be tailored for a specific application.

Hand-control switches S1 and S2 are each connected to one of the dual retriggerable monostable circuits of U1. Their outputs are fed to an unusual transistor AND gate (built around Q1), which, in turn, triggers U2 (the output-control timer circuit). The remaining monostable circuit in U2 is not used.

With both hand switches in their normally open positions, U1 is in a non-triggered state, with a high output at pin 9 and a low output at pin 6. The PNP transistor is reverse biased, with a positive voltage applied to its base and a negative voltage applied to its emitter. Thus, the transistor is turned off, so zero volts is supplied to U2's input circuit.

When S1 is closed, a positive pulse is fed to pin 12 of U1, causing pin 9 to go low for a preset period. That low is applied to the base of Q1, causing it to turn on. If S2 isn't closed within the preset period, nothing happens at the circuit's control output. But if S2 is closed in the prescribed time, the second timer is triggered, producing a positive output at U1, pin 6, which is applied to the emitter of Q1. With Q1 turned on and the positive output of U1 at pin 6 applied to the emitter of Q1, a positive output appears at Q1's collector. That output triggers U2, which then produces a timed positive output at pin 6, turning Q2 on and, thereby, supplying power to the load circuit.

(Continued on page 76)

THINK TANK

By John J. Yacono

TTL and Derbys

As promised last month, we'll go over some of the basic differences between the various bipolar logic families and present some of the contributions to the pinewood-derby request. All contributors to the "Pinewood-Derby Fund," as it were, will receive a book and, as a special premium, a MCL1010 logic chip. Speaking of logic . . . .

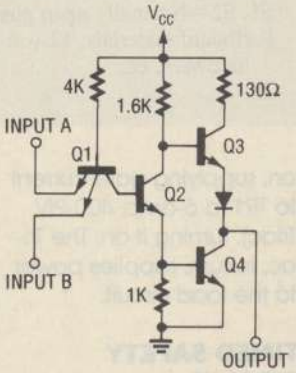

Fig. 1. All TTL gates receive input through "multiple-emitter transistors." They provide fast switching times. At their output, such gates have an active pull-up network.

STANDARD TTL

The standard TTL series, (which we'll just call TTL from now on) was the first saturated-logic IC family. That family supports the largest number of logic functions. Chips in that family bear the prefix 54 or 74 without any letter following those two numbers.

To understand the key operational differences between this family and the others, it is (sadly) necessary to discuss a little circuit architecture. All TTL gates (like the example in Fig. 1) receive input through "multiple-emitter transistors." They provide fast switching. To further enhance their speed, their resistor values were deliberately set low, as the resulting higher current levels cause the transistors to switch faster. Because of that, however, the chips consume more power and generate more heat than any other family.

At the output of all gates in this family (see Fig. 1 again) is an active pull-up network that provides a low driving-source impedance. That has the additional benefit of improving the noise margin and further improving device speed.

LOW-POWER TTL

The low-power family (prefixed with 54L or 74L) has essentially the same circuitry as the TTL series. The resistor values, however, are about ten times higher. That results in a great power-dissipation reduction—they need less than one-tenth of the power required by the TTL family. Of course, device speed is sacrificed, resulting in propagation delays that are three times longer than its power-hungry cousin (TTL).

LOW-POWER SCHOTTKY

Most of the transistors in low-power Schottky chips have a built-in Schottky diode within their base-collector junction. The diode prevents the transistors from becoming fully saturated, and so they react quickly when base drive is interrupted. The special transistors and thinner PN junctions allow this family higher current gains as well.

Unlike TTL units, these circuits do not use multi-emitter inputs. They use "diode-transistor" inputs (see Fig. 2), which are faster and require increased input breakdown voltage; the input threshold is only about

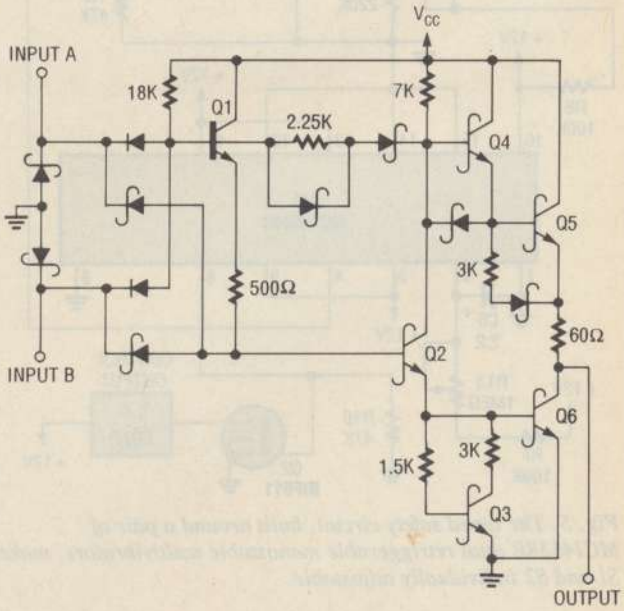

Fig. 2. Low-power Schottky IC's have "diode-transistor" inputs, which are faster and give increased input breakdown voltage over multi-emitter inputs.

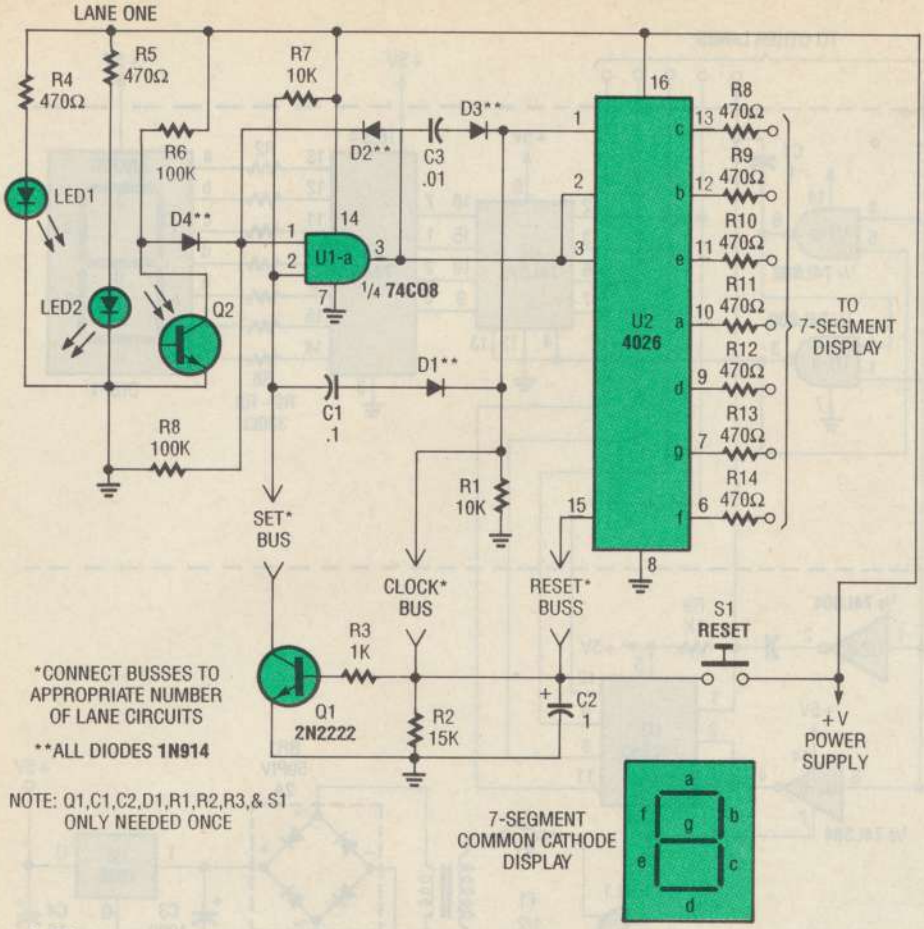

Fig. 3. This very expandable pinewood-derby judge provides extra illumination to the IR phototransistors. Among its display options is its ability to drive a 7-segment display for each lane.

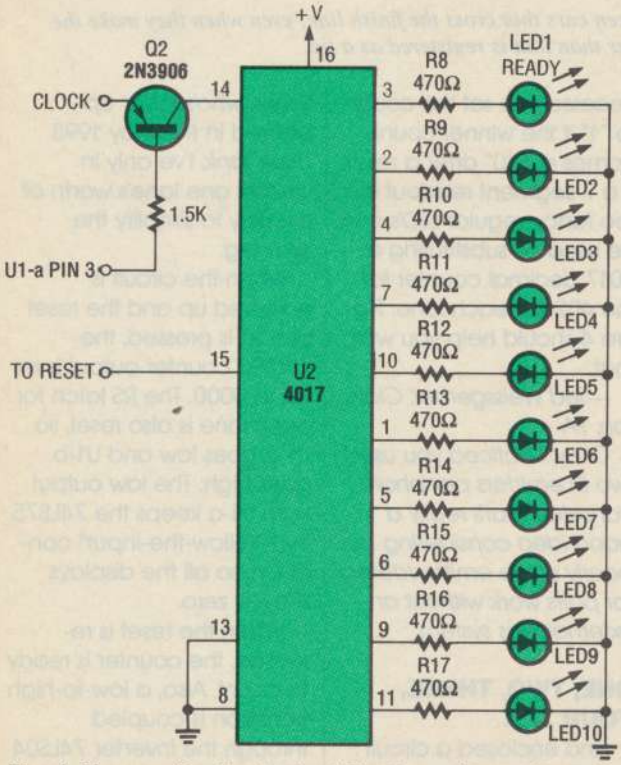

Fig. 4. If you prefer, the circuit of Fig. 3 can drive a discrete LED display.

0.1 volt lower than TTL. In addition to fast switching, the inputs exhibit very high impedance whether held high or low. Further still, the transistor's high current gain (or current amplification) significantly reduces input loading and provides better output performance.

The output circuitry is also enhanced with a Darlington-transistor pair to increase speed and improve drive capability. The outputs also have active pull-down transistors to yield a good square output. This output configurations is often called a squaring network. The part numbers for this family are prefixed with either 54LS or 74LS.

SCHOTTKY

In the plain Schottky family, which bears the prefix designation 54S or 74S, Schottky-barrier diodes are used to divert base current. That prevents the transistors from reaching deep saturation, thereby improving speed. The input and internal circuitry resemble that of the standard TTL gate, however the resistor values are about one half that of those in TTL IC's. The output sections have a Darlington-transistor pair for voltage pull-up and an active pull-down squaring network, as well.

ADVANCED LOW-POWER SCHOTTKY

The members of the advanced low-power Schottky family (*i.e.*, chips with a 54ALS or 74ALS prefix) deliver twice the data handling efficiency with a 50% reduction in power consumption compared to the LS family. That is possible because the various components of these chips are isolated from one another by boundaries of oxide. That, coupled with improved circuit-design techniques, yields smaller component geometries, thinner PN junctions, and therefore lower junction capacitances. That enables the devices to achieve increased operating speeds, while requiring much lower operating currents. The basic ALS gate is similar to an LS gate. It consists of either PNP-transistor or diode inputs, as well as Darlington-transistor pair pull-up and an active pull-down squaring network at the output.

ADVANCED SCHOTTKY

The advanced Schottky family (prefixed with 54AS or 74AS) has virtually the same circuit configuration as the ALS group. It has PNP transistor or diode inputs. Each input also has a transistor with its base-emitter junc-

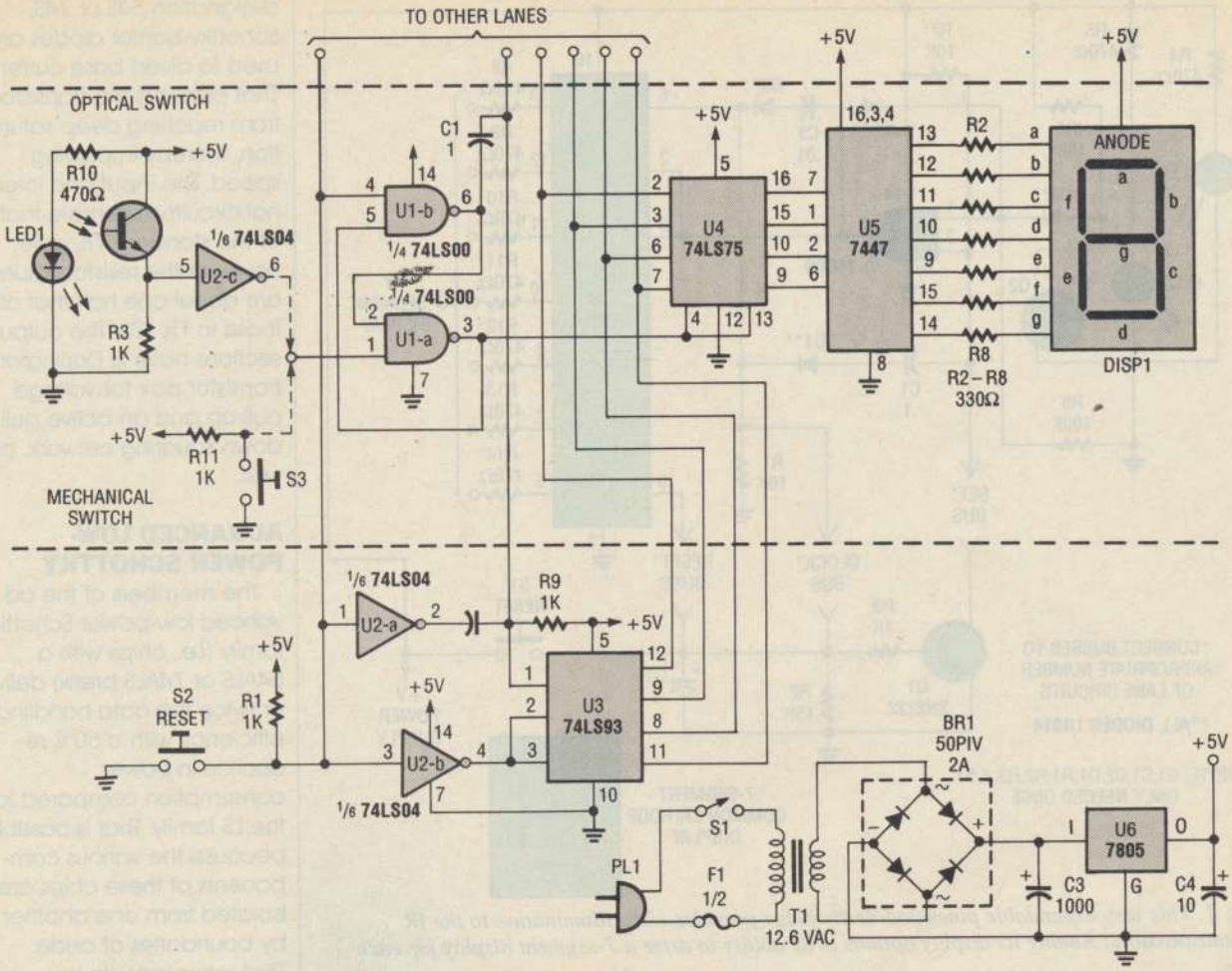

Fig. 5. This TTL-based pinewood-derby judge can discriminate between cars that cross the finish line, even when they make the crossing within a couple of milliseconds of each other. Anything closer than that is registered as a tie.

tion shorted for electrostatic protection.

The output consists of a Darlington-pair transistor pull-up and an active pull-down squaring network. They also contain a special network at the output section to improve output rise time and reduce power consumption during switching at high repetition rates.

Now let's get to the mail.

CIRCUIT REVISION

Enclosed is a pinewood-derby circuit partially taken from the *Think Tank* letter by Roy Worrall (May, 1993) and adapted to indicate the finishing positions for any number of lanes (as requested by Stephen Guye in the same column).

A schematic diagram of the circuit is shown in Fig. 3; note that only one lane-lockout circuit is shown. Each lane uses the same U1 lockout feature to stop a lane's circuit from counting after a car crosses it. The output from each lane's AND gate is also fed to its counter by a capacitor (C3) and diode (D3) on a common bus. The diode prevents the capacitor from introducing the signals from other AND gates to the gate for this lane. The output of the AND gate turns off the clock to the corresponding lane's counter and turns on the lane readout.

The 4026 counter only requires appropriate dropping resistors to drive a 7-segment display. Note that C1, while optional, may be necessary to set the count to "1" if the winner count comes out "0" after a reset. If a 7-segment readout is too fancy, regular LED's can be used by substituting a 4017 decimal counter for the 4026 in each lane. Figure 4 should help you with that.

—Ted Weissgerber, Clairton, PA

Okay. I noticed you used two IR emitters per photo transistor. That's really a good idea considering how poorly some emitter/detector pairs work without an external lens system.

ONE, TWO, THREE, FOUR . . . .

Find enclosed a circuit (see Fig. 5) that meets the requirements of Stephen Guye, who's letter appeared in the May 1993 *Think Tank*. I've only included one lane's worth of circuitry to simplify the drawing.

When the circuit is powered up and the reset button is pressed, the 74LS93 counter output is reset to 0000. The RS latch for each lane is also reset, so U1-a goes low and U1-b goes high. The low output from U1-a keeps the 74LS75 in a "follow-the-input" condition, so all the displays show a zero.

When the reset is released, the counter is ready to count. Also, a low-to-high transition is coupled through the inverter 74LS04 (U2-a) and capacitor C2 to the input of the counter,

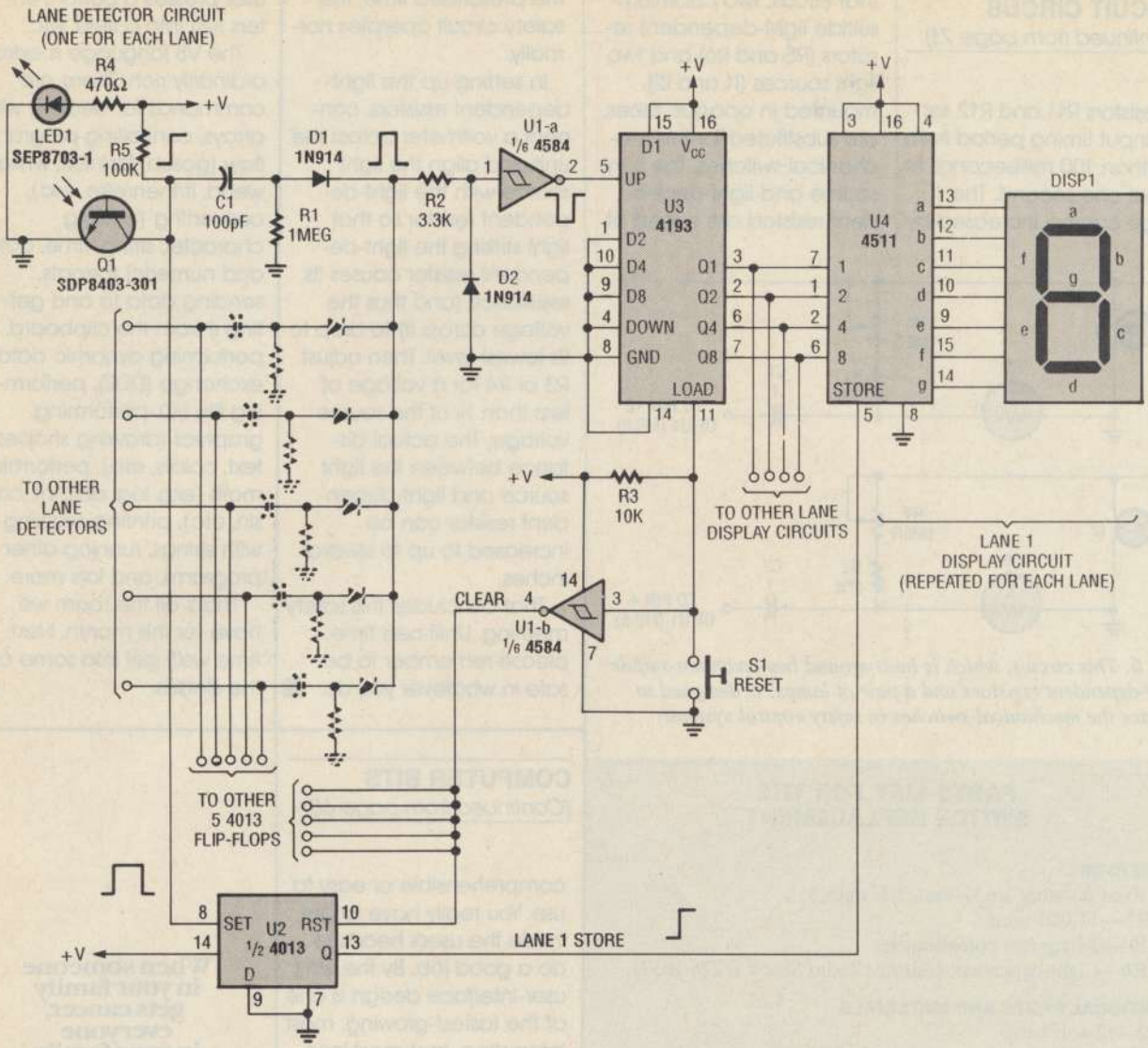

Fig. 6. Although no power-supply voltage is specified, 12-volts should secure good operation from this pinewood-derby circuit.

advancing it one count to 0001. All lanes now read one (1) and we are waiting for the first car to cross the end of the track.

Whichever sensor circuit is closed first toggles its cross-coupled 74LS00's (U1-a and U1-b in this circuit). The current number on the counter output (in our case a 1) is then latched into the corresponding 74LS75 (U4). The change in logic state is also AC coupled through capacitor C1 to the input of the counter (U3), advancing it by one count. It now reads 0010. As the second car activates its RS latch, the number 2 is latched into its display. This can continue up to a count of 9 if there are that many lanes.

If two cars cross the line and activate their respective switches within less than 1 millisecond of each other (the time constant of the clock pulses to the counter), they will receive the same count. That leads to a tie for a given place, but considering how close the race was, is easy to justify. Hope this circuit is of use to you.

—Allen K. Baker, Stark City, MO

I'm pleased that you provided both mechanical and IR sensing options in your circuit.

THE WINNER IS . . . .

I was intrigued by the request for a six-lane pinewood-derby judge, so I came up with the attached circuit (see Fig. 6). Cars crossing the finish line are each detected by an IR emitter/detector pair. When a car passes over the detector, a rising pulse is produced at the detector, which latches the output from a counter. The display for that lane then holds the current count for that lane. About 100 microseconds later, a pulse from an edge-triggered monostable increments the counter.

The process is repeated for each car across the finish line, and each car's finishing place is displayed in the appropriate lane. The displays and latches are reset by a pushbutton switch (the displays are all reset to show a "1" when a 1 is loaded in the counter).

—Bob Smueles, Vashon, WA

That certainly sounds exactly like what Stephen is looking for.

Well, we've run out of space for this time. Until next month, write to *Think Tank*, **Popular Electronics**, 500-B Bi-County Blvd., Farmingdale, NY 11735. ■

CIRCUIT CIRCUS

(Continued from page 71)

Resistors R11 and R12 set the input timing period from less than 100 milliseconds to about one second. The range can be increased by increasing the values of C3 and C4. The control-timer output's on-period (which can vary from about 250 milliseconds to over several seconds) can be adjusted via R13. The timing range can also be increased by increasing the value of C5.

Now if we could eliminate the mechanical hand switches, the safety circuit could become even more trouble free.

SWITCH REPLACEMENT

A method for eliminating the mechanical hand switches is shown in Fig. 6. In that circuit, two cadmium-sulfide light-dependent resistors (R5 and R6) and two light sources (I1 and I2), mounted in opaque tubes, are substituted for the mechanical switches. The light source and light-dependent resistors are aimed at each other and separated by about one inch.

Without anything breaking the light source, the voltage across each of the light-dependent resistors is very low. But when the light source is prevented from reaching either R5 or R6, the resistance of that light-dependent resistor increases to a very high value, causing the voltage drop across that light-dependent resistor to rise to about 12-volts, sending a positive pulse to the input of U1 in Fig. 5. If both light sources are blocked within the prescribed time, the safety circuit operates normally.

In setting up the light-dependent resistors, connect a voltmeter across the unit and align the light source with the light-dependent resistor so that light striking the light-dependent resistor causes its resistance (and thus the voltage across it) to drop to its lowest level. Then adjust R3 or R4 for a voltage of less than ¼ of the source voltage. The actual distance between the light source and light-dependent resistor can be increased to up to several inches.

That concludes this safety meeting. Until next time, please remember to be safe in whatever you do. ■

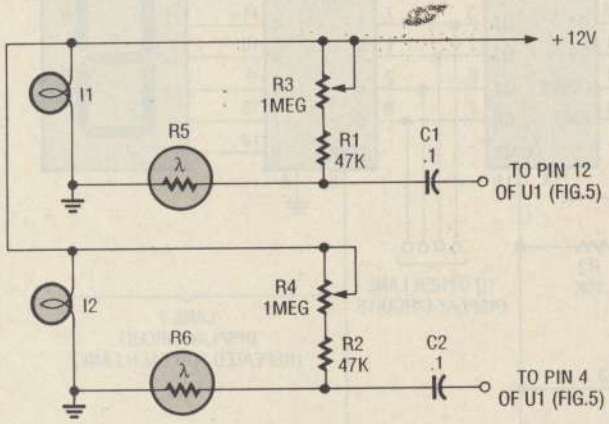

Fig. 6. This circuit, which is built around two cadmium-sulfide light-dependent resistors and a pair of lamps, is designed to replace the mechanical switches in safety control systems.

PARTS LIST FOR THE SWITCH REPLACEMENT

RESISTORS

(All fixed resistors are ¼-watt, 5% units.)
R1, R2—47,000-ohm
R3, R4—1-megohm potentiometer
R5, R6—Light-dependent resistor (Radio Shack #276-1657)

ADDITIONAL PARTS AND MATERIALS

I1, I2—12-volt lamp
C1, C2—0.1-µF, ceramic-disc capacitor
Perfboard materials, tubing (see text), 12-volt power source, wire, solder, hardware, etc.

COMPUTER BITS

(Continued from page 68)

comprehensible or easy to use. You really have to get inside the user's heads to do a good job. By the way, user-interface design is one of the fastest-growing, most interesting, and most innovative branches of computer science. It draws as much on psychology and art as on computer science and technology.

Event processing is simple in concept. Users cause events (*e.g.*, pressing a key, clicking a mouse button, etc.), and so does the system (*e.g.*, letting a program know that a timer has timed out). Writing VB code, therefore, amounts to specifying what happens when the user presses a button, enters text into a field, etc.

The VB language is extraordinarily rich. There are commands for dealing with arrays, controlling program flow (gosub, for/next, while/wend, if/then/else, etc.), converting (among character, string, time, date, and numeric) formats, sending data to and getting it from the clipboard, performing dynamic data exchange (DDE), performing file I/O, performing graphics (drawing shapes, text, colors, etc.), performing math (exp, log, abs, int, cos, sin, etc.), printing, working with strings, running other programs, and lots more.

That's all the room we have for this month. Next time we'll get into some of the details. ■

VENDOR INFORMATION

Visual BASIC
Microsoft Corp.
One Microsoft Way
Redmond, WA 98052-6399
800-426-9400
206-882-8080

When someone in your family gets cancer, everyone in your family needs help.

Nobody knows better than we do how much help and understanding is needed. That's why our service and rehabilitation programs emphasize the whole family, not just the cancer patient.

Among our regular services we provide information and guidance to patients and families, transport patients to and from treatment, supply home care items and assist patients in their return to everyday life.

Life is what concerns us.

So you can see we are even more than the research organization we are so well known to be.

No one faces cancer alone.

AMERICAN CANCER SOCIETY

Select any 5 books for only $4.95 (values up to $150.75)

when you join the Electronics Book Club®

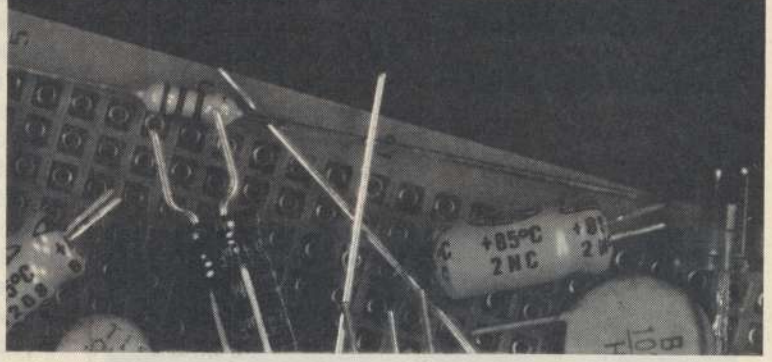

1367P $29.95
Softcover

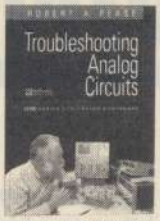

9410H-XX $32.95
Counts as 2

2790P $15.95
Softcover

4270H $29.95

2613P $18.95
Softcover

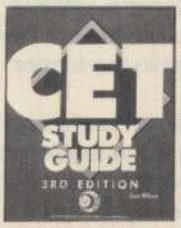

4076H $27.95

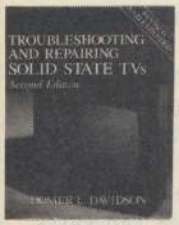

3700H-XX $36.95
Counts as 2

3589H $27.95

2800P $17.95
Softcover

3765P $18.95
Softcover

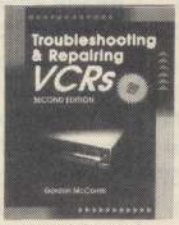

3777H-XX $32.95
Counts as 2

3485H $27.95

3258P $19.95
Softcover

4061P $9.95
Softcover

4139H $27.95

3975H $29.95

3671P $18.95
Softcover

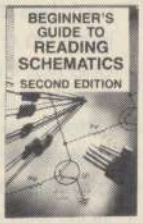

3632P $10.95
Softcover

4122H-XX $36.95
Counts as 2

3627P $19.95
Softcover

3044P $12.95
Softcover

3886P $13.95
Softcover

3923H $32.95

3270H-XX $32.95
Counts as 2

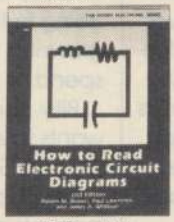

2880P $15.95
Softcover

4111H $27.95

3457P $19.95
Softcover

3279P-XX $24.95
Counts as 2/Softcover

1604P $17.95
Softcover

3795P $19.95
Softcover

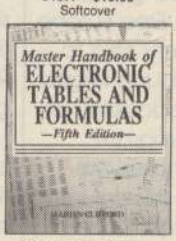

3739H-XX $39.95
Counts as 2

As a member of the Electronics Book Club . . .

. . . you'll enjoy receiving Club bulletins every 3-4 weeks containing exciting offers on the latest books in the field at savings of up to 50% off of regular publishers' prices. If you want the Main Selection do nothing and it will be shipped automatically. If you want another book, or no book at all, simply return the reply form to us by the date specified. You'll have at least 10 days to decide. And you'll be eligible for *FREE* Books through the Bonus Book Program. Your only obligation is to purchase 3 more books during the next 12 months, after which you may cancel your membership at any time. ©1993 EBC

A shipping/handling charge and sales tax will be added to all orders. All books are hardcover unless otherwise noted. (Publishers' prices shown)

If you select a book that counts as 2 choices, write the book number in one box and XX in the next.

PE993

Your most complete and comprehensive source for the finest electronics books.

If card is missing, write to: Electronics Book Club, Blue Ridge Summit, PA 17294-0810

DX LISTENING

By Don Jensen

Cutbacks Hit Shortwave Broadcasters

More shortwave broadcasters are facing tighter budgets, it seems. So far, most of them are simply making do with less, cutting back on hours or the number of different foreign-language services offered. But, sooner or later, I'm afraid, the cutbacks could drive some off of the shortwave bands entirely.

The U.S. Board for International Broadcasting, which oversees *Radio Free Europe* and *Radio Liberty*, said to be the world's fourth-largest shortwave-broadcasting organization in program hours, was facing severe budget cuts as this column was being written. Since the chilliest days of the Cold War, RFE has been targeting audiences in the one-time Soviet bloc countries of eastern Europe, while RL aimed its programs at listeners within the former USSR.

This logo is from a program schedule that is sent to listeners by Turkish Radio Television's shortwave service, the Voice of Turkey, broadcasting from Ankara.

The Clinton administration and some legislators have questioned the continued need for these stations. Proposed budgets would cut RFE and RL funding by $60 million in the next fiscal year, a similar amount the following year, and $281 million more in fiscal year 1996. That, effectively, would put the stations out of business.

Radio Sweden, too, was facing the prospect of drastic belt tightening, at this writing. The international-broadcasting section of the Swedish Broadcasting Corporation, which now airs SW programming in eight languages for overseas listeners, may face a cut of 15 million *kroner* from its budget. Hans Wacholz, Radio Sweden's director, called the proposal a staggering blow, noting that it amounts to one-third of its funding.

While there is little question that Radio Sweden will continue on shortwave, the Swedish government says the SW service can meet its primary goal of reaching Swedes abroad by merely relaying Swedish-language domestic programs on shortwave. Facing elimination are one or more of Radio Sweden's foreign-language services.

The Swedish Foreign Ministry has expressed doubts that Radio Sweden has many foreign listeners. The difficulty of accurately measuring a worldwide SW audience is to blame for that view. For that reason, it's more important than ever for SWL's to write to their favorite broadcasters. Send those cards and letters. Give the stations some tangible proof that there is, in fact, an audience out here that cares!

SHORTWAVE ON THE CHEAP

You don't need big bucks and fancy gear to be a shortwave listener. I've said it before, but I like the way Billy R. Pogue of Lake Havasu City, AZ, put it in a recent letter.

"About half the fun of DX'ing is doing it on a receiver one has built ones self, the typical case with the SWL's of the early days. Tuning in some distant station on a high-performance commercial set in no way matches the thrill of hearing it on a minimalist rig one has built with ones own hands. It is rather like the difference between the exquisite agony of decision of a 6-year-old in a candy store with a few pennies and the blase dullness of going in there as a grownup with $10 to spend."

Billy goes on: "If someone wants to experience a real high, try SWL'ing on a set using no purchased components except for a tube or transistor and an earphone, all else being salvaged or handmade. This is an ego booster like nothing else I know of."

For those adventurous ones willing to follow his prescription for DX'ing fun, check out your public library. If yours is like the one

in my hometown, you'll probably find some dusty, musty, old radio books on the shelf. If they were published 30 or 40 years ago, so much the better. For this you don't need "state-of-the-art" technology. In one of these vintage radio manuals, you'll probably find an easy-to-follow chapter or two on building your own simple shortwave-radio receiver.

The Rev. Philip Bohlken, Chatanooga, TN, offers another approach to cheap and simple shortwave listening. "Try wrapping a regular portable radio's ferrite antenna with the end of a long wire antenna," he suggests in a recent letter. "I was experimenting with this and, to my surprise, I heard a weak interval signal from *Radio Canada International* when I switched the radio to AM. More experimentation showed me that I could get reasonably good nighttime shortwave reception from about 4,000 to 9,000 kHz by wrapping the ferrite-rod antenna with seven turns of No. 26 enameled wire, and soldering the ends to the AM terminals of the tuning capacitor.

"I also soldered 10 feet of wire to one of the capacitor's terminals for an antenna. Listening on the small radio was better with earphones. Tuning was tricky, requiring a very gentle touch on the tuning knob, but with this homebrew, shortwave receiver, I have heard stations from Australia to Austria.

"I told a Chinese-American friend what I had done and she brought me her husband's boom box for a conversion. Every night after they closed their restaurant, they listen to Beijing and Taiwan in Chinese."

Another testimonial! If you're bored with tuning in the same old powerhouse stations, you may find these ideas offer a whole new perspective to SWL'ing!

MORE LETTERS

Several years ago, Bill Kovaleski, Providence RI, wrote us a nostalgic note about his one-time shortwave favorite, *American Forces Radio TV Service*. Now Bill has written again.

"As an ex-Marine," he says, "I missed AFRTS when it stopped regular SW broadcasting. Thanks to your column, though, I learned that AFRTS still could be heard on a lower-sideband feeder service intended to relay programming for rebroadcast by local AFRTS stations around the world."

"Now I've learned about another military broadcaster with shortwave programs. It's *Australian Armed Forces Radio*, 2AAFR, which has a program Monday through Friday at 0530 UTC for its military troops serving in Somalia. The half hour show is produced by the Australian Department of Defense in AAFR studios in Canberra and is transmitted on shortwave on 17,840 kHz by *Radio Australia*."

Thanks, Bill. I might add that *Radio Nederland's* "Media Network" program says that reports for this program can be sent to Lt. Kerry Martin, Australian Armed Forces Radio, B-4-22-N Russell Offices, Canberra 2600 Australia. I should also note, Bill, that with the peacekeeping efforts in Somalia, Croatia, and elsewhere during the past months, there have been other special transmissions for military personnel of other nationalities.

Belgium's *Radio Vlanderen International*, for instance, has special programs in Dutch and French for UN forces serving in Croatia at 1700 UTC Saturdays on 9,905 kHz, and for Belgian soldiers in Somalia at 1800 UTC Sundays on 15,540 kHz.

DOWN THE DIAL

And while you have the envelopes and stamps handy, why not drop me a line to report what you're hearing on shortwave. Tell the rest of us about some of your more interesting recent SW loggings? The address is *DX Listening*, **Popular Electronics**, 500-B Bi-County Blvd., Farmingdale, NY 11735.

Here is what some DX listeners are hearing:

CANADA—6,005 kHz. Montreal's *CFCX* is heard around 1130 UTC, relaying the medium-wave outlet, *CIQC* and its' "Country Coast to Coast" program.

JORDAN—9,560 kHz. *Radio Jordan* is reported broadcasting here from 1545 UTC with English identification, U.S. pop music, news, weather, and a program schedule.

NIGERIA—4,770 kHz. *Radio Nigeria* has been logged here from 0430 UTC with its famous "talking drums" tuning signal, followed by home-service programing in English, including a morning prayer, news, and a commercial for Nigerian Airways.

RUSSIA—11,685. Radio Ala is noted on this frequency with Russian language programming, including folk music, about 1300 UTC. As alternative frequencies, try 7,400 or 11,965 kHz. ■

*Credits: Marina Pappas, SD; Dave Valko, PA; Jim Clar, NY; Michael Bilec, PA; Ed Newbury, NE; Doug Robertson, CA; Marie Lamb, NY; William Davenport, TN; Elliot Straus, NJ; World DX Club, c/o Richard D'Angelo, 2216 Burkey Dr., Wyomissing, PA 19610; North American SW Association, 45 Wildflower Rd., Levittown, PA 19057

FREE
Electronics & Computer Software Education Catalog

*Fast-Track Individual Learning Programs
*State-of-the-Art Classroom Courses
*The Best Values in Electronics Education

New
Career-Level Courses
Personal Computer Servicing
TV and VCR Servicing

New
Computer-Aided Instruction
DC & AC Electronics
Semiconductors
Electronic Circuits

The stunning animations, hypertext glossary, and easy-to-understand text make learning electronics a breeze...and fun!

Learn the easy and affordable way from the Masters in Electronics Training - Heathkit®. From Basic Electricity to Advanced Microprocessor Applications and more, Heathkit will provide you with an unparalleled learning experience at a fraction of the cost of other programs.

Heathkit®
Educational Systems
For your FREE Catalog, call
Toll-Free 1-800-44-HEATH
please mention this code when calling 107-015

CIRCLE 6 ON FREE INFORMATION CARD

By Joseph J. Carr, K4IPV

You Asked For It!

Judging from the mail that I've been receiving lately, I gather that receiver projects are a favorite with many readers. There is even a contingent that digs minimalist receivers, such as the direct conversion design covered several months ago in this column. There are a couple of interesting letters on that project that require answers this month.

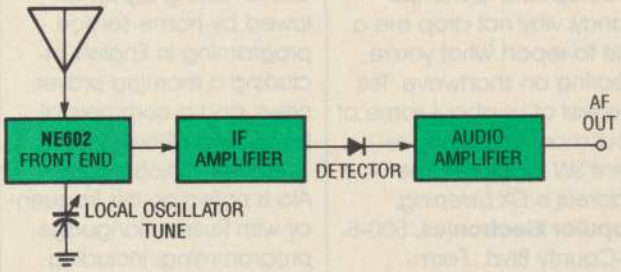

Fig. 1. The minimalist superhet-receiver system suggested by this functional-block diagram is based on a design that uses an NE602 for the front-end, and either an NE604 FM/IF subsystem or an MC1350P as the IF amplifier.

OUT OF THE MAILBAG

One reader wrote to asked why local-oscillator circuits in receivers should use NPO, silvered mica, or polyethylene capacitors in the frequency-setting circuits. (See the July and August 1993 insatllments of this column for a discussion of this subject). According to the reader, when he first got into ham radio, they were all called condensers . . and a condenser was a condenser was a condenser. In other words, it didn't matter what type was used.

That must have been a very long time ago, because even in the immediate post-war period (which is how far back my collection of ARRL handbooks goes), they were recommending silvered mica and NPO ceramic capacitors for oscillator circuits. The reason for that being that those capacitors, and the polyethylene units that are used in modern circuits, are noted for exceptional temperature coefficients. All capacitor values vary with temperature change, but those types drift the least (NPO types supposedly do not drift at all).

Another reader told me that "there is nothing new under the Sun" (in Latin, no less), and that the direct conversion receiver was nothing more than a rehash of one he saw in the late 1930's. Actually, he could've seen it in the late 1920's if he was old enough; it was called the synchrodyne receiver in those days. No, there is nothing new under the Sun, but the advent of modern semiconductor electronics, especially devices like Signetics' NE602, make it especially easy to build direct-conversion receivers.

Still another minimalist fan wanted to build a minimalist superheterodyne receiver for the ham bands. I wrote back to him and suggested the layout in Fig. 1. That circuit uses the NE602 for the front-end, and either a Signetics NE604 FM/IF subsystem or the MC1350P as the IF amplifier.

NE604 FM/IF SUBSYSTEM

A block diagram of the NE604 (with external components) is shown Fig. 2. The NE604 consists of an IF amplifier and, because it is intended for FM communications receivers, an IF-limiter (which clips the output signal, removing noise pulses and any residual amplitude modulation). The limiter drives a quadrature FM detector. The primary winding (along with its internal capacitor) of a 455-kHz IF transformer (T1) is used as a phase coil for the quadrature detector. No component values are shown for T1 because their values are inherent in the transformer selected. Try using a Mouser Electronics (2401 Hwy. 287 N., Mansfield, TX 76063-4827; Tel. 800-346-6873) type no. 42IF103. Bandpass filtering is provided by a pair of 455-kHz ceramic resonators (RES1 and RES2).

One interesting feature of the NE604 is its RSSI (received signal-strength indicator) circuitry. The RSSI circuitry outputs a voltage (across R1, a 10k load resistor in our illustration) that is logarithmically proportional to the IF input's signal strength. That allows the V1 output voltage to be used to develop automatic-gain control (AGC), or to drive an S (signal-strength) meter.

IF AMPLIFIER

Figure 3 shows an IF-gain block based on the MC1350P (which is also available as the NTE746). The MC1350P can provide a gain of up to 62 dB, which can be AGC orchestrated (where needed). The input bandwidth can be limited by a ceramic IF resonator (RES1 in Fig. 3) or by some other form of IF bandpass filter. I am currently working on a receiver de-

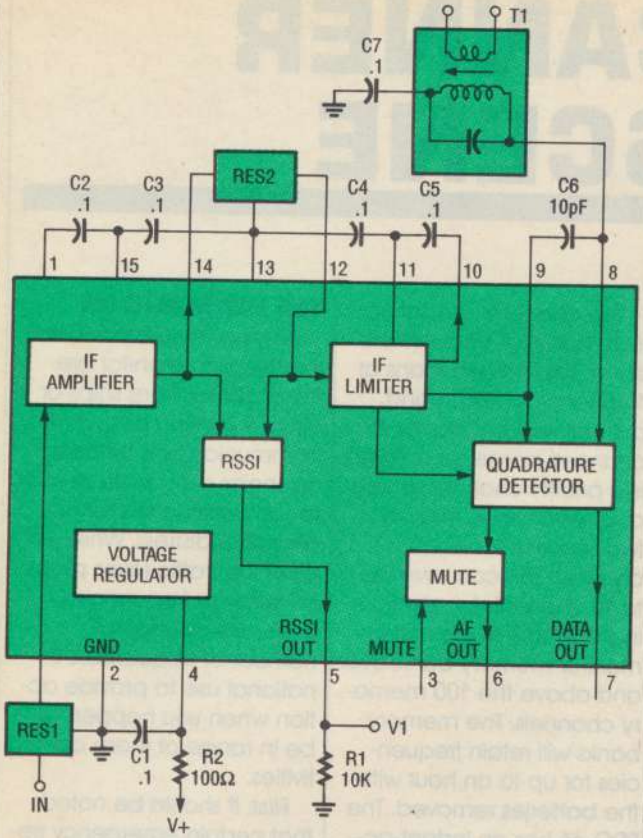

Fig. 2. The primary winding of a 455-kHz IF transformer (T1) serves as the phase coil needed by the NE604 FM/IF subsystem's the quadrature detector.

sign in which a 455-kHz Collins mechanical filter is used at the input of an MC1350P.

In Fig. 3, resistors R1 and R2 are set to match the input and output impedance of RES1, which for the low-cost resonators used in most projects is 390 to 470 ohms. Resistor R3 isn't always needed, but where it is used, it should have a value of ten times that of R2. Many designs simply eliminate it, and there doesn't seem to be any problem with that approach. (I've done it both ways.)

The output circuit can be an IF transformer, but that poses a little bit of a problem. With an IF transformer, the gain is so high that the layout is critical. Under that condition, the input and output must be kept separate. Any sloppiness in the layout, or any lack of decoupling can cause the circuit to oscillate at the IF frequency. In order to keep the MC1350P in check, I usually use a 2.5-mH RF choke in the output stage. Others will use an IF transformer at the output, but keep the input untuned. In those circuits, there will be an untuned post-amplifier between the filter output and the MC1350P input.

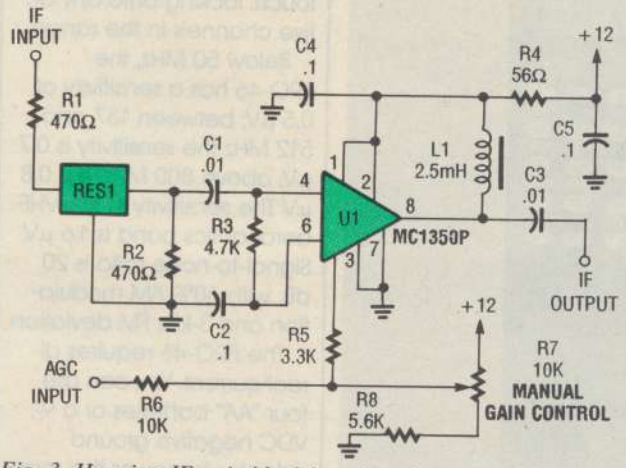

Fig. 3. Here is a IF-gain block based on the MC1350P, which can provide a gain of up to 62 dB.

The gain-control terminal (pin 5) must be kept at from +5 to +12 volts; maximum gain occurs at +5 volts and minimum gain at +12 volts. A potentiometer and fixed resistor (R7 and R8, respectively) are used as a manual gain control. That circuit can be used to set the overall gain, while an automatic-gain control (AGC) voltage can be applied through resistor R6. As the AGC voltage goes positive with increases in signal level, it reduces the gain of the MC1350P stage proportionally.

The MC1350P is basically a low-cost mini-DIP version of the MC1590G (which comes in an eight-pin metal can, and has a different pinout). It offers tremendous gain, but because of that gain, it can be a little finicky to use. Make sure to use good layout, grounding, and bypassing techniques. The capacitors should be either ceramic-disc, mica, Mylar, polyethylene, or some other low-inductance type.

The ground-return paths should be very wide (3/16-inch or wider printed-circuit tracks) and kept short. For those who find it difficult to obtain the MC1350P, the NTE746 (from New-Tone Electronics, Inc.) or the ECG746 (from Philips Electronics), which are pin-compatable direct-replacements, can be used. Those components are widely available from local electronics-parts distributors.

OTHER DESIGNS?

It is certain that **Popular Electronics** readers have some good ideas and good projects for minimalist-receiver designs. I'd be interested in seeing your designs, some of which could be published in this column (provided that you provide a schematic, a brief description, and a photo if available). Those interested in "strutting their stuff" can contact me at *Ham Radio*, **Popular Electronics,** 500-B Bi-County, Farmingdale, NY 11735.

And, of course, I'm always interested in seeing your other ham-related questions, comments, and other letters. Again, contact me at the above address.

MAKING BOOK

Before, we close, just a reminder that ham and electronics book publisher HighText Publications (125 North Acacia Avenue, Suite 110, Solana Beach, CA 92075; Tel. 619-793-4141 and 793-4142) has several different titles available that may be of interest to you. Harry Helms *All About Ham Radio* and *Shortwave Listening Guidebook*, as well as my own *Receiving Antenna Handbook* and *All About Science* are on the list. Also available is Forrest Mims *Engineer's Notebook*—a must for anyone who likes to noodle around with lots of different circuits. Credit card orders can be placed through IPG at 800-888-4741. ■

SCANNER SCENE

By Marc Saxon

Scanning for S.O.S. calls

Realistic has brought out a very good-looking handheld performer called the *PRO-46*, a 100-channel job offering excellent frequency coverage, including: 29–54 MHz (in 5-kHz steps), 108–137 MHz AM mode (12.5-kHz steps), 137–174 MHz (5-kHz steps), 406–512 MHz (12.5-MHz steps), and 806–956 MHz (12.5-kHz steps). Cellular bands are locked out at the factory.

The 100-channel Realistic PRO-46 is a well-designed, easy-to-use, general-purpose scanner.

The channels are set up in 10 banks of 10 channels each. The PRO-46 scans at 14 channels per second, but can search/scan at 19 channels per second. There is a priority channel as well as a switchable delay of two seconds for each channel. You can save up to 10 channels located during a search in a special monitor memory bank, over and above the 100 memory channels. The memory banks will retain frequencies for up to an hour with the batteries removed. The PRO-46 has an instant-access button that scans the seven NOAA 162-MHz weather channels at a touch, locking onto any active channels in the range.

Below 50 MHz, the PRO-46 has a sensitivity of 0.5 μV; between 137 and 512 MHz the sensitivity is 0.7 μV; above 800 MHz, it is 0.8 μV. The sensitivity in the VHF aeronautics band is 1.6 μV. Signal-to-noise ratio is 20 dB, with 60% AM modulation and 3-kHz FM deviation.

The PRO-46 requires direct current. You can use four "AA" batteries or a 9-VDC negative ground adaptor to power the scanner. The rubberized antenna is attached via a BNC-type connector.

This attractive, versatile, and easy-to-use scanner performed well for us. The LED readout is informative and, in all, the Realistic PRO-46 proved itself to be a well-designed, general-use handheld that should easily satisfy signal chasers. It's available at Radio Shack.

THE SEARCH IS ON

Among the more interesting things to monitor are transmissions from ships or aircraft seeking help, or the communications of those agencies sent out to search for and rescue ships and aircraft in distress. While not all of this traffic takes place on scanner frequencies, there are a sufficient number of frequencies in national use to provide action when you happen to be in range of these activities.

First, it should be noted that certain emergency frequencies are set aside for voice and/or non-voice use in summoning aid and rescuers. This includes the use of beacons on some channels. Those frequencies are: 34.05, 38.16, 40.50, 40.95, 41.88, 121.6, 123.05, 126.4, 138.45, 138.78, 143.28, 143.75, 143.90, 148.15, 155.16, 156.30, 157.075, 157.05, 157.15, 157.175, 164.30, 237.9, 242.8, 151.9, 252.8, 259.0, 277.5, 282.8, 381.0, 383.9, 386.5, and 457.525 MHz.

Any scanner owner interested in making certain that every possible avenue of action-communications is on tap should recognize that these frequencies deserve permanent programming slots in the main-station receiver. We even keep them in the handheld.

YOUR LETTERS

For some reason, there has been a lot of interest in the old Tennelec Memory Scan unit. Apparently, there

are many of those relics on sale at flea markets, but they don't come with the required book that provides information on the binary codes used to program in the frequencies. We get letters all the time from readers asking if we can provide a source for that information.

We also heard from a reader who has a code book, and who is willing to photocopy the information anybody needs. He asks $1 for the postage and envelope to send the information, *plus* $1 for each frequency wanted. One envelope can obviously be used to hold several frequencies. This offer came from Bernard Maguire, 7689 Drolet Street, Montreal, Quebec, Canada H2R 2C6. Contact him if further information is needed.

We always enjoy hearing from readers who tell us about bringing in skip reception. Just such a letter arrived the other day from Allen G. Pringle, Registered Monitor KCA6ZD, Port Hueneme, CA.

Allen wrote to advise that he uses a Realistic PRO-2026 and a PRO-37. The antenna is about 30 feet high. Using that equipment, and encouraged by things he read here about listening on the lower frequencies for distant stations, Allen started searching between 30 and 35 MHz. Within a couple of minutes he nailed down the fire department in New Concord, OH, on 33.36 MHz, followed by many other stations in the same area. As you can imagine, he was very pleased that we suggested that idea, and hopes that other readers try it, too.

Good starter channels include oil-spill cleanup frequencies of 36.25 and 41.71 MHz, the popular Army National Guard's 41.00-MHz channel, and the U.S. Fish and Wildlife Service on 34.85 MHz. Or, you can just start with 30.00 or 30.50 MHz, and concentrate on that and on succeeding 500-kHz chunks of spectrum at 30 minutes per clip. Work your way up to 35.00 or 36.00 MHz, then start over, keeping a log of any distant stations that you intercept.

If you find that the channels happen to be particularly productive on any given day, keep on moving upward in frequency to 40.00 MHz and beyond. When conditions are right, the DX can go beyond 50 MHz, which is why the 6-meter ham band (at 50 MHz) has so many fans among amateurs.

Yellowstone National Park attracts more visitors than any other, and several letters on my desk are asking for the frequencies there. We would recommend punching up: 164..80, 166.375, 167.15, 411.675, 411.775, 417.375, 417.475, and 417.575. Private concessionaires in the park use 152.42 and 463.45 MHz. The rangers in some parks get testy about people using handheld scanners, especially if they are played at a sound level that is annoying to other visitors. You might want to use an earphone, and maybe be a bit discrete by not flashing the scanner to the rangers. That bit of advice also goes for all other national parks.

We hope to hear from you with your opinions, questions, and frequencies. Your input is sought in keeping this column and magazine tops. Write to us at *Scanner Scene*, **Popular Electronics**, 500-B Bi-County Blvd., Farmingdale, NY 11735. ■

ANTIQUE RADIO

(Continued from page 67)

and the colors can change radically through the effects of age and exposure to light. Owens suggests that the original colors can be restored by abrasive cleaning and polishing. But, in view of the fragility and costliness of Catalin radios, he strongly suggests consulting an expert before trying any restoration procedure.

Before going on to Dr. Mednick's article, it's important to note that space restrictions prevent me from mentioning all of the plastics discussed by Owens. I've had to stick to the most common ones used in pre-World War II radios.

Dr. Mednick tells us that "Catalin," originally a trade name used by the Catalin Corporation, has become a generic term encompassing not only the Catalin material but also any other product formed of liquid-cast phenolic resin. Cabinets made of that material were a little more expensive than Bakelite (though not nearly as expensive as wood) because of the large amount of hand work (including the tooling of cabinet openings and polishing) required after removing the product from the mold.

The strong lure of the Catalin radio, says Mednick, derives from three factors: color, texture, and design. As we already know, the Catalin material was easy to tint, and manufacturers went out of their way to create engaging colors. The results were sometimes incredibly eye-catching, and remain so today.

In discussing the color changes that have taken place in Catalins over time, Mednick says that reds fare the best, usually just deepening to a darker shade. Whites may become yellow, pumpkin, or brown; greens may become darker or transform to yellow, brown, or black; and the rare blue color may become brown or black. Sometimes, the changed colors are far more attractive than the original factory versions.

What Dr. Mednick means by texture and design is ". . . a thick, deep, usually swirled or marbleized, often translucent appearance that originally (or when polished) acquires a rich, glass-like 3-D finish. One must see a Catalin radio in person to appreciate fully the visual texture' to which I am referring–neither words nor pictures can properly communicate it. . . .these radios embrace the essence of Art Deco—modernistic streamlined shapes and styles representative of the machine age."

If you have the money and the inclination to start a Catalin collection, Mednick suggests not holding out for mint examples. Cracking is a normal part of the Catalin aging process, and a set purchased in mint condition now might crack of its own accord next week. Furthermore, the same set that sells in the $300 to $500 range with small chips or hairline cracks, could easily fetch over $1,000 if it were in mint (perfect) condition.

Many thanks to Editor Sibley for making it possible for me to share this most interesting material with *Antique Radio* readers. Those who would like to read both articles in their original form may order a back issue of the May 1993 *Old Timer's Bulletin* for $2.50 postpaid. Send the order to Mr. Ludwell Sibley, Editor, *The Old Timer's Bulletin*, 44 E. Main St., Flemington, NJ. ■

ELECTRONICS LIBRARY

Mastering Solid-State Amplifiers

by Joseph J. Carr

Using the same easy-going, clear-cut style that makes his *Ham Radio* column a favorite, in this book Joe Carr provides a solid understanding of how today's solid-state amplifiers work. The self-study course combines theory, practical experiments, and projects to explain component specifications, design standards, and applications for all kinds of solid-state amplifiers. Beginning with an introduction to electronics, circuit construction, and basic electrical theory, the book goes on to cover DC power supplies, including plans for building one. Subsequent chapters include instructions for a wide variety of useful projects that can be built using inexpensive, easy-to-find components. Those projects include PN-junction diodes, NPN/PNP bipolar transistors, field-effect transistors, IC amplifiers, audio amplifiers, and small-signal amplifiers. An appendix—which the author recommends reading before attempting any of the hands-on projects—explores electrical safety in the electronics lab.

Mastering Solid-State Amplifiers costs $19.95 and is published by TAB Books, Division of McGraw-Hill Inc., Blue Ridge Summit, PA 17294-0850; Tel: 800-822-8138.

CIRCLE 98 ON FREE INFORMATION CARD

ELECTRONICS PARTS CATALOG No. 93-C

from Hosfelt Electronics

Electronics hobbyists and professionals alike will find the 128 pages of this catalog chock full of needed components, tools, and supplies. Included are PC-board supplies, VCR replacement parts, cables, wires, a wide variety of connectors, test equipment, IC's, relays, resistors, capacitors, hand tools, power supplies, switches, laser supplies, books, videotapes, and more. Specials include giant LED's, a Sanyo "AA'" battery charger, an LCD clock module, and a Tripp LIte spike- and noise-filtered power strip. There is no minimum on charge-card and pre-paid orders.

Catalog No. 93-C is available for $2 from Hosfelt Electronics, Inc., 2700 Sunset Blvd., Steubenville, OH 43952-1158; Tel: 800-524-6464; Fax: 614-264-5415.

CIRCLE 90 ON FREE INFORMATION CARD

FILE & DISK MANAGEMENT: From Chaos to Control

by Alfred Glossbrenner

It doesn't matter how much power your computer has under its hood—if you don't know how to harness it, your computer won't be in peak form. This book-and-diskette package, which covers all IBM-PC and compatible hard-disk models, shows everyone from complete beginners to experienced "disk jockeys" how to make the most of their hard drives. The package is filled with insightful tips and practical techniques for maximizing a hard drive's performance, capacity, and security.

With clear, easily understood explanations and hands-on instructions, the book covers everything from how and where to buy a disk drive that suits your needs to installing and using a network. In between, the book explains how to install any hard drive, including soft-

ware setup and hardware connections; discusses IDE (integrated drive electronics) drives and how they can help you; provides step-by-step instructions on the best way to prepare, set up, load, and organize your hard disk; shows how to navigate through your system with DOS, menus, shells, and front ends; outlines an easy ten-step procedure designed to nearly double your disk space; and gives all the details you'll need to tweak your drive for speed.

The 3.5-inch diskette includes 11 shareware programs that act as a toolkit for hard-disk management. The complete McAfee Anti-Virus package consists of three programs that find, kill, and protect against viruses. There is a file compressor, a disk defragmenter, a program that allows you to format disks by simply inserting them into the disk drive, and one that searches for unnecessary files for deletion. CLEANUP finds all the 0-, 1-, or 2-byte files that other programs leave behind, FD locates duplicate files, DISKID handles volume and disk labels, and FINDTYPE lets you display all of the drive type settings in your BIOS drive tables to help during disk-drive installation.

File & Disk Management: From Chaos to Control costs $39.95 and is published by Osborne McGraw-Hill, 2600 Tenth Street, Berkeley, CA 94710.

CIRCLE 96 ON FREE INFORMATION CARD

INTRODUCTION TO THE ELECTROMAGNETIC WAVE

by F. A. Wilson

Electromagnetic waves are a vital part of life on earth, carrying light and heat from the sun and communications over vast distances. Although we are surrounded by them, we can't see or feel electromagnetic waves. This book tackles the complex subject by providing a basic understanding instead of deep theoretical or difficult mathematical explanations. The first chapters are devoted to discussions of the nature and behavior of electromagnetic waves. Later

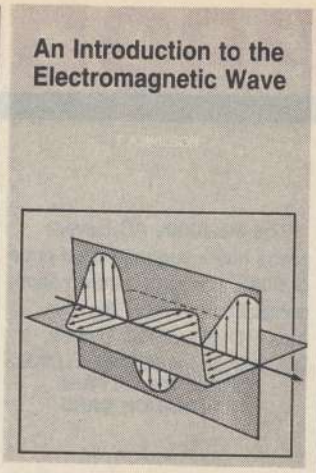

chapters take a practical look at radio waves in ground, sky, and satellite applications. Also covered are electromagnetic waves as constrained in wave guides, optical fibers, and heating systems. An understanding of elementary mathematics and a basic knowledge of electronics is assumed.

An Introduction to the Magnetic Wave (order No. BP315) is available for $5.95 plus $2.50 shipping and handling from Electronics Technology Today Inc., P.O. Box 240, Massapequa Park, NY 11762-0240.

CIRCLE 97 ON FREE INFORMATION CARD

1993 GENERAL CATALOG

from Contact East

With an emphasis on service, Contact East offers same-day shipping, easy ordering, clear answers to your technical questions, and a "user-friendly" catalog. Along with color product shots and straightforward descriptions of features and functions, most product categories include selection-guide tables and explanations of special features. Color-coded page tabs, keyed to the table of con-

tents, make it easy to find products listed by category. Product lines include test and measurement instruments; tool kits and cases; tools; soldering and desoldering; static protection; storage and handling; PCB assembly specialties; workbenches and chairs; adhesives; cleaning supplies and aerosols; and lighting, magnification, and measuring tools. A detailed index pinpoints specific items. New products are clearly marked, and include 3½-digit DMM's from Beckman Industrial, Extech, and B+K Precision; and a variety of Tektronix oscilloscopes.

The 1993 General Catalog is free upon request from Contact East, 335 Willow Street, No. Andover, MA 01845; Tel: 508-682-2000; Fax:508-688-7829.

CIRCLE 91 ON FREE INFORMATION CARD

1993 CATALOG OF COMPUTERS & ACCESSORIES AND ELECTRONIC PARTS & COMPONENTS

from American Design Components

In this catalog, a leading wholesaler of electronic and computer-related components is offering their inventory to the public at discounted prices. Geared to meet the needs of manufacturers, R&D labs, schools and universities, hobbyists, students, and computer buffs, the 40-page catalog is filled with computer systems, motherboards, disk drives, monitors, and a wide variety of computer accessories. Also featured are lead-acid and NiCad

batteries, power supplies, adaptors, IC's, connectors, switches, relays, fans, blowers, motors, and pumps. The catalog also offers electronic kits and books, test equipment, CCTV systems, telephones, electronic gadgets, and lighting for special effects.

The 1993 Catalog is available without charge from American Design Components, 400 County Avenue, Secaucus, NJ 0709; Tel: 800-776-3700.

CIRCLE 92 ON FREE INFORMATION CARD

THE COMPLETE AMATEUR TELEVISION WORKBOOK

Second Edition

assembled by Mike Stone, WB0QCD

Written by 15 technical writers active in amateur television (ATV), this one-stop source book contains 46 pages of new material. The spiral-bound book includes everything you need to know about ATV, including early TV history; NTSC video-signal theory; required gear; equipment sources; repeaters; clubs; DX, FM, and digital TV; antennas; VSB; filters; CATV; charts; and terminology. Also included are three build-it-yourself proj-

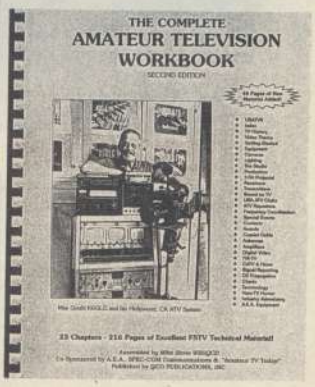

ects. Those who already own the first edition (in excellent condition) can trade it in for $5 off the purchase price of the second edition.

The Complete Amateur Television Workbook, Second Edition costs $18.95 plus $1.50 shipping and handling from QCD Publishing Inc., Amateur TV Today!, P.O. Box 1677, Weatherford, TX 76086. ■

CIRCLE 93 ON FREE INFORMATION CARD

NEW PRODUCTS

AC Probe

Overheated transformers and neutral conductors, spurious tripping of breakers, and loss of computer data are all symptoms of power-quality problems such as harmonics and current spikes, which can be caused by non-linear loads. *Fluke's 80i-1000s* AC probe, when used with any oscilloscope or instrument that accepts millivolt inputs through a standard BNC connector, can be used to troubleshoot power-quality

problems. Those problems can easily be analyzed by reading the distorted current waveforms displayed on an oscilloscope used with the probe. Its rugged construction and 1000-amp rms measurement range make the probe well suited for use by building and plant electricians, as well as electrical contractors.

Besides measuring up to 1000 amps rms, the 80i-1000s has a frequency range that will allow it to measure well beyond the 50th harmonic in the power line. Three switch-selectable ranges allow for measurements as low as 100 mA. An insulated BNC connector and specially designed output cable rated at 600V are standard, as is built-in range-overload protection.

The 80i-1000s AC current probe has a suggested list price of $395. For further information, contact John Fluke Mfg. Co., Inc., P.O. Box 9090, Everett, WA 98206; Tel: 800-87-FLUKE.

CIRCLE 106 ON FREE INFORMATION CARD

NOTEBOOK COMPUTER WITH BUILT-IN PRINTER

To meet the needs of the 9.1 million "mobile" professionals who are away from their desks more than half the time—namely, industry-standard computing, communications capabilities, and printing away from the office—*Canon* has introduced the *NoteJet 486*, a full-featured notebook computer with a built-in micro Bubble Jet printer that prints laser-quality text and graphics on plain paper. The NoteJet 486 prints on a variety of paper types and sizes, including transparencies, at a resolution of 360 dots per inch. An optional PCMCIA (Personal Computer Memory Card Interface Association) data/fax modem can be inserted into one of the computer's two PCMCIA slots, allowing it to print received faxes on plain paper.

The NoteJet 486 features Texas Instruments' 25-MHz 486SLC microprocessor with 1 kilobyte of cache and 4 megabytes RAM (expandable to 12 Mbytes). It is available with either 85-, 135-, or 180-Mbyte, 2.5-inch hard-disk drive and a 3.5-inch floppy-disk drive. Other features include a 9.5-inch, backlit, VGA monochrome LCD screen; a handheld input device; serial, parallel, PS/2 mouse/key pad ports; factory-installed Windows, DOS, and NoteJet tutorial; an AC adapter/recharger; and NiCad battery. Average battery life is four hours, which includes printing eight pages. The NoteJet 486, which measures 12.2 × 10 × 2.2 inches, weighs 7.7 pounds with its battery installed. The re-

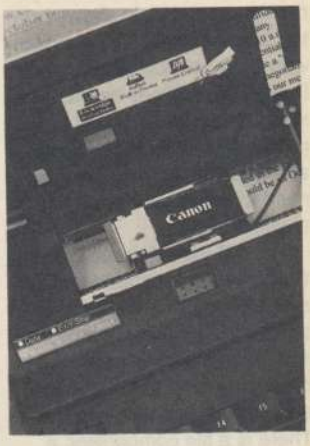

placeable Bubble Jet print head will print approximately 3000 pages; the ink cartridge will print about 65 pages.

The 85-Mbyte Model 1, 135-Mbyte Model 2, and 180-Mbyte NoteJet 486's cost $2499, $2799, and $2999, respectively. Replacement print heads cost $43; ink cartridges cost $8; and the optional data/fax modem and software cost $399 (v22bis) and $899 (v32bis). For more information, contact Canon Computer Systems, Inc. (CCSI), 123 East Paulino Avenue, P.O. Box 5048, Costa Mesa, CA 92628-5048; Tel: 800-848-4123 or 714-438-3099.

CIRCLE 100 ON FREE INFORMATION CARD

SINGLE-BOARD COMPUTER

Suncoast Technologies' 70691BASIC single-board computer allows hobbyists and engineers alike to design sophisticated computer programs using easy-to-understand BASIC-52. Created by Intel, BASIC-52 is a high-level programming language that is stored as part of the 8052AH BASIC microcontroller's ROM. That "smart chip" makes it easy to program the 70691BASIC using your desktop IBM PC-compatible computer. Test your programs simply by typing "run;" the program will execute automatically. Modifications are

Introducing Australia's Leading Electronics Magazine...

Silicon Chip, the most popular hobby electronics magazine south of the equator is written for you; if you are fascinated by building projects, increasing your understanding of theory, fixing consumer electronic products, and keeping up-to-date with world-wide trends within your electronics interests.

Silicon Chip, an Australian publication, is reprinted in the United States offering the best of selected articles suitable for North American readers.

Plan to become a reader of Silicon Chip.

SILICON CHIP®

Packaged in a specially prepared format guaranteed to excite the electronics hobbyist with new ideas, novel projects, extraordinary features and down-right good reading.

Inside **Silicon Chip** you will discover how the other side of our world—down under—approaches the same hobby interests as you do, with ramifications that will amaze you.

Detailed construction projects to appear in upcoming issues of Silicon Chip include:

4-Channel Guitar Mixer
Adjustable 0-45V, 8A Power Supply
Interphone Digital Telephone Exchange
1.5V to 9V DC Converter
Multi-Sector Home Burglar Alarm
1-Megabyte Printer Buffer

Exciting and Imaginative Features like:

Understanding Computer Memory
How to Interlink Musical Instruments
What's New in Oscilloscopes

Become A Charter Subscriber Today

SPECIAL OFFER

A sample copy may be ordered for only **$2.50!**
In Canada: $3.50!
Use coupon below and write across top "SAMPLE ISSUE." Fill out coupon except for subscription information and mail.
Sorry—no credit cards. Send only check or money order in U.S. funds.

If you are fascinated by electronics, especially the hobby aspects related to construction projects, theory, applications in home and shop, and latest developments, if you are compelled to experiment and "fix-it," then **Silicon Chip** is your kind of magazine.

Silicon Chip is available exclusively by subscription. So take advantage of this great opportunity and start your Charter Subscription today.

SILICON CHIP, 500-B Bi-County Boulevard, Farmingdale, New York 11735 **PE993**

I'm convinced! Enroll me as a Charter Subscriber. Enter my subscription as designated below.

United States of America
☐ 12 issues for $29.95
☐ 24 issues for $49.95

Canada
☐ 12 issues for $40.61
☐ 24 issues for $70.57
(Includes postage & G.S.T.)

☐ Payment enclosed Please charge my ☐ VISA ☐ Mastercard

For your convenience, if paying by credit card: To avoid any interruption in service, your subscription will be renewed automatically at 12-issue intervals, at the then prevailing introductory rate, until you advise us to cancel it.

Signature _____

Account No. _____ Expiration Date _____

Offer valid in the U.S.A. and Canada only. No foreign Orders.

Name _____

Address _____

City _____ State _____ Zip _____

All orders payable in U.S.A. funds only. Allow 6-8 weeks for delivery.

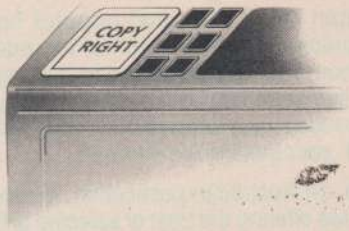

THE Most
~~AN~~ IMPORTANT PART
OF YOUR PHOTOCOPIER
ISN'T PART OF
YOUR PHOTOCOPIER

Having a machine may not permit you to photocopy books, journals, newsletters and magazines. The Copyright Clearance Center CAN. Contact us to find out how you too can COPY RIGHT!℠

COPYRIGHT CLEARANCE CENTER
27 Congress Street, Salem, MA 01970 □ Tel. (508) 744-3350 □ Fax (508) 741-2318

© 1993 Copyright Clearance Center

COMING NEXT MONTH
in the October 1993 Issue of
Popular Electronics®

Protect your home with a Microwave Motion Detector you build from our plans. Build an auto time-delay—a security add-on every car should have. Plus, what's new in the Consumer Electronics Marketplace.

On Sale
AUGUST 17, 1993

Watch for it!

Pick up *Popular Electronics* at your favorite Newsstand, Convenience Store, Bookstore or Supermarket

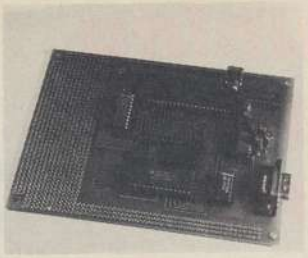

easy to make and can be testec in just seconds. Programs can be saved by downloading them in ASCII format to a hard drive or floppy, or an EEPROM using the included BASIC-52 EEPROM eraser and software. The completely assembled and tested, 4.5 × 6-inch board features plated holes, a large prototyping area for interfacing, a 40-pin header for easy expansion, a hi-address decoder chip, an 8K external memory chip, low (5VDC) power requirement, RS-232 interface circuitry, and a DB9 male connector for RS-232. Because it is compatible with Binary Technology's BXC51, you can create programs on the 70691BASIC and transform them into faster-running .ASM programs with BXC51.

The 70691BASIC development board costs $70 plus $2.90 shipping. For more information, contact Suncoast Technologies, 5835 Spring Hill, FL 34606; Tel/Fax: 904-596-7599.

CIRCLE 101 ON FREE INFORMATION CARD

PC ADD-ON A/D CONVERTER

You can measure analog voltage via your IBM-compatible PC's parallel port using *B&B Electronics' ADIO10*. Its eight analog inputs have a voltage range of −5 VDC to +5 VDC, and its conversion time is less than 5 microseconds per channel. The speed, resolution, and flexibility of the ADIO10 make it well-suited for measuring voltages from lab experiments, potentiometers, and various types of sensors. The ADIO10 plugs into the parallel port using a DB-25 connector. Terminal blocks are used to connect external devices to the ADIO10.

Three different operating modes are offered. In single-ended mode, the eight input channels are converted with respect to a reference. In differential mode, the inputs are grouped into pairs and the voltage of each input is converted with respect to the other input in the pair. In pseudo-differential mode, which is helpful when there is a variable DC-offset voltage applied to a group of inputs, all of the inputs are converted with respect to one input.

The ADIO10 comes with an instruction manual and a demo disk that contains programs written in QuickBasic, Pascal and C. Those demonstration programs can be used to test or monitor the ADIO10, and the

routines can easily be modified for your specific application.

The ADIO10 costs $125.95. An optional external power supply (model 232PS) costs $14.95. For further information, contact B&B Electronics Manufacturing Company, 4000 Baker Road, P.O. Box 1040, Ottawa, IL 61350; Tel: 815-434-0846; Fax: 815-434-7094.

CIRCLE 102 ON FREE INFORMATION CARD

CAMCORDER SUPPORT

As camcorders become smaller and lighter, it becomes more difficult to hold them steady, resulting in images that jump and shake. Designed for use with palm-sized camcorders or cameras, the *Mini VideoProp* from *Sima* is a telescopic support that functions as a walking tripod. The device rests comfortably against the user's chest. Its telescopic support attaches to the camcorder or camera and easily adjusts to eye level. A swivel ball provides steady support from any angle, and a quick-release mechanism al-

lows the videographer to easily snap the support on or off. The camcorder is held steady, resulting in images that are uniformly stable, whether the user is taking a still shot, panning, or even zooming, when every movement of the camcorder is magnified.

The Mini VideoProp has a suggested retail price of $39.95. For additional information, contact Sima Products Corporation, 8707 North Skokie Blvd., Skokie, IL 60077; Tel: 708-679-7462; Fax: 312-286-7227.

CIRCLE 103 ON FREE INFORMATION CARD

ELECTRICAL CODE CALCULATOR

According to *Extech*, their *ElectriCalc Plus* is the first electrical-code calculator. Designed to help users save time, money, and materials by avoiding code violations and preventing material waste in field work, the device has built-in 1990 and 1993 National Electrical Code tables 310/16-17, 250-94/95. That allows the user to make complex calculations without wading through the 800-page Electrical Code book. The device works directly in volts, amps, watts, volt-amps, horsepower, % efficiency, and power factor. The ElectriCalc Plus instantly calculates wire and conduit sizes, taking into account CU or AL wire material, 75°/90° insulation, ambient temperature, and 10 and 30 systems. In addition, it finds voltage drop, wire size, actual volts dropped, and percentage of volts dropped; solves complex grounding calculations; and finds derated wire sizes.

The ElectriCalc Plus, including user's guide, case, batteries, and a one-year warranty, costs $99. For additional information, contact Extech Instruments Corporation, 335 Bear Hill Road, Waltham, MA 02154; Tel: 617-890-7440; Fax: 617-890-7864.

CIRCLE 104 ON FREE INFORMATION CARD

ALTERNATING CURRENT ADAPTOR

For use with all *A.W. Sperry* digital multimeters, and most other manufacturers' models that have 0–200-mV DC range, the *Model CA-200* alternating-current adaptor measures 0–199.9 amps AC (continuous) with 3% accuracy on 50–400-Hz circuits. It will provide true rms readings when used with a true rms DMM. The adaptor measures 5¾ × 2¾ × 1¼-inches and has a jaw capacity of ⅝ inch.

The Model CA-200 alternating-current adaptor costs $39.95. For additional information, contact A.W. Sperry Instruments Inc., 245 Marcus Boulevard, Hauppauge, NY 11788; Tel: 516-231-7050. ■

CIRCLE 105 ON FREE INFORMATION CARD

CABLE TV DESCRAMBLERS

How You Can Save Money on Cable Rental Fees

Bullet Proof

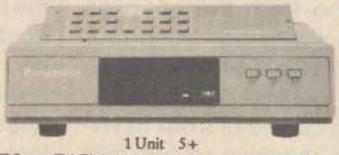

	1 Unit	5+
BEST Super Tri-Bi Auto/ Var. Gain Adjustment	$119.95	$85
Jerrold Super Tri-Bi	$109.95	$79
Scientific Atlanta	$109	$79
Pioneer	$109	$79
Panasonic TZPC145	$99.95	$79
Stargate Converter	$95	$69
Digital Video Stabilizer	$59.95	$29
Wireless Video Sender	$59.95	$49.95

US Cable'll Beat Anyone's Price Advertised in this Magazine!

30 Day Money Back Guarantee
FREE 20 page Catalog
Visa, M/C, COD or send money order to:
U.S. Cable TV Inc. DEPT. KPE993
4100 N. Powerline Rd., Bldg. F-4
Pompano Beach, FL 33073

1-800-772-6244

For Our Record

I, the undersigned, do hereby declare under penalty of perjury that all products purchased, now and in the future, will only be used on Cable TV systems with proper authorization from local officials or cable company officials in accordance with all applicable federal and state laws. FEDERAL AND VARIOUS STATE LAWS PROVIDE FOR SUBSTANTIAL CRIMINAL AND CIVIL PENALTIES FOR UNAUTHORIZED USE.

Date:_____

Signed:_____

No Florida Sales!

CIRCLE 15 ON FREE INFORMATION CARD

LEARN VCR

Cleaning/Maintenance/Repair
Earn up to $1000 a Week, Working Part Time from Your Own Home!

Secrets Revealed! . . . NO Special Tools or Equipment Needed . . . Train at Home in Your Spare Time!

IF you are able to work with common small hand tools. IF you possess average mechanical ability, and have a VCR on which to practice and learn...then we can teach YOU VCR Maintenance and Repair!
FACT: Up to 90% of all VCR malfunctions are due to simple Mechanical or Electro-Mechanical breakdowns!
FACT: Over 86 million VCRs in use nationwide! Average VCR needs service or repair every 12 to 18 months!

For FREE Information Package!

Send coupon to: Foley-Belsaw Institute of VCR Repair, Dept. 62057, 6301 Equitable Rd., Kansas City, MO 64120

FOLEY BELSAW *Since 1926* Dept. 62057

☐ Check for FREE Lifetime Career Kit on VCR Repair.

Name _____

Address _____

City _____

State _____ Zip _____

CIRCLE 5 ON FREE INFORMATION CARD

ELECTRONIC DOORBELL

(Continued from page 44)

adhesive label; you'll also need to drill small holes in the front panel to let the sound escape from the speaker. Once the enclosure has been prepared, the speaker can then be either glued in position or secured to the lid using a couple of small aluminum brackets, machine screws, and nuts.

The printed-circuit board can then be mounted to the bottom of the case at one end, so that it sits underneath the speaker. Check that there is enough room at the other end of the case for batteries (if that's the way you intend to power your unit) before drilling the mounting holes.

The board can then be mounted in position on 5-mm spacers and secured using screws, nuts, and star washers. The assembly can now be completed by drilling a small exit hole in the side of the case for the leads to the doorbell switch. The leads can be made as long as is necessary to connect the unit and doorbell switch together. ■

HOME FIRE SAFETY. ACT ON IT!

HOME FIRE SAFETY Act On It!

FOR FREE HOME FIRE SAFETY TIPS, WRITE:
United States
Fire Administration
P.O. Box 70274
Washington, DC 20024

TELEPHONE SCRAMBLER

(Continued from page 34)

and solder the green and red wire of that cord to the appropriate points on the board as in Fig. 4. Label the other cord TO TELEPHONE and solder its green and red wires to the appropriate circuit-board pads. Lastly, hook up the wires to the LED's, switches, and power jack, and mount the board to the standoffs.

Hook Up and Operation. Plug the cord labeled TO WALL JACK into the telephone jack on the wall. Plug the cord labeled TO TELEPHONE into the telephone. Hook up the power cable, and plug in the transformer. If LED2 does not light check for 13 volts AC at the points where power enters the board and check for the correct orientation of BR1. Pick up the telephone and check for normal operation. If the phone is not working properly, check the orientation of U6 and the hookup of the telephone cables to the board.

Pressing S2 should light LED1, and pressing S1 should turn off LED1. If that does not happen, check the orientation of Q1 and SCR1, and for solder bridges on those components. Switch to the non-scrambled mode (LED1 off) and wait until the dial tone ceases and is replaced by a recording prompting you to hang up and try again (approximately 30 seconds). As soon as you here the recording press S2, switching the unit into the scrambled mode and lighting LED1. The recording should now be unintelligible but still present. Pressing S1 should return the recording to normal.

To use the Telephone Scrambler, each party must have their own unit. Dial the phone and establish contact with the second party before engaging the scrambler. If you engage the scrambler first, the tones from a touch-tone phone will be scrambled, rendering them useless in dialing the phone. After establishing contact, both parties can engage their scramblers by pressing S2 and enjoy a completely private and secure conversation.

Note: You'll be able to hear the 3580-Hz tone in the background very faintly. That is normal and can serve as a kind of reminder that your conversation is secure from any third party monitoring. Upon hanging up the telephone, the scrambler will automatically switch back to the non-scrambled mode. ■

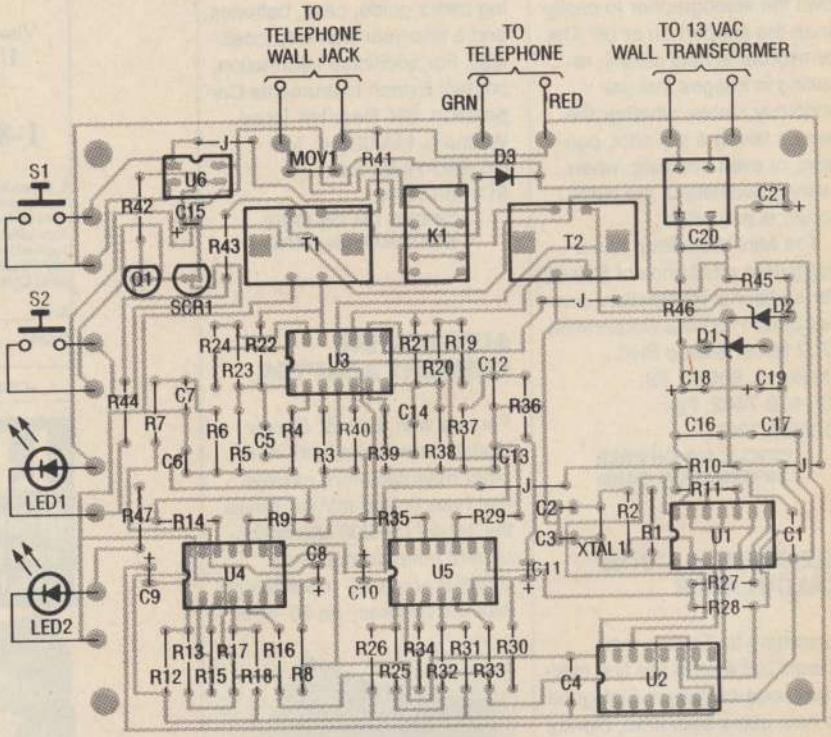

Fig. 4. Use this parts-placement diagram when assembling the printed-circuit board. Don't forget to install the four jumpers.

COMPUTER VIRUSES

(Continued from page 40)

lect has been on the market for some time and offers updates. Programs like CLEAN, SCAN, SCANRES, and VIRUSCAN by McAfee Associates; CHECKUP by Richard B. Levin; and FLU SHOT¢ by Ross M. Greenberg (Software Concepts Design) are established programs that are updated regularly. They take differing approaches, but have good reputations for the detection, testing, monitoring, and/or cleaning of viruses. You can find these programs on your favorite bulletin board, from shareware disk vendors, or directly.

Symantec has issued a freeware version of their commercial program, called The Norton Virus Scan. They've distributed it to more than 250 BBS's; look for it as a compressed (ZIPped) file, NAVSCAN.ZIP. It detects over 1,100 viruses, allows removal of infected files, and scans local and network drives. Technical support is in the form of recorded questions and answers on their "24-Hour Virus Newsline" at 310-828-2906, or by calling 900-INFO-NAV (at $1 per minute). The program is free.

Like Symantec, Central Point Software offers a free virus-detection utility, the Central Point Anti-Virus Scan-Only System (CPAV-SOS) to help users defend against viruses at minimum cost. The freebie, which uses the same scanning engine as in CPAV, scans DOS files to determine if they are infected, alerting you if it finds a virus. The firm distributes the utility free through the Central Point BBS, CompuServe, and other online services.

The Antivirus Bookshelf. Among the best sources of current virus information are the publications of the NCSA. It offers about two dozen books and booklets, periodicals, and other publications on various virus subjects. Their most popular booklet is the 75-page *Computer Virus Survival Guide* ($9.95 to nonmembers). Another popular title is the 200+ page *Computer Virus Handbook* (for $44).

Virus books are few, and they're hard to keep updated. One that's still useful despite its age is the 1989 *V.I.R.U.S. Protection—Vital Information Resources Under Siege*, by Pamela Kane (Bantam Books, $39.95). Kane reportedly will publish a follow-up book soon, tentatively titled *Anti-Virus Power Tools*; check your bookseller for publication information.

Also look for Richard B. Levin's *The Computer Virus Handbook* (Osborne/McGraw-Hill, 1990, $24.95). Levin's book is surprisingly current, and it's also available in Spanish; copies are available from Penguin Portables and bookstores. Viruses also get extensive coverage in the Mike Callahan/Nick Anis book, *Dr. File Finder's Guide to Shareware* (Osborne/McGraw-Hill, $39.95).

A brand-new entry is *Rx PC: The Anti-Virus Handbook*, by Janet Endrijonas (Windcrest/McGraw-Hill, 1993, $29.95). With reviews of nine antiviral software packages and a 3.5-inch diskette, it's designed to be a complete antivirus toolkit

The Future. What does the future hold? Like everything else about computers, the future will be more complex; there's no ideal solution to prevent all viruses. Already, we're seeing that the virus scanner is less effective because of new viruses that play dirty by not sitting still long enough to be ambushed. You may have an infector's tell-tale signature code in your favorite scanner, but this matters little if the code has evolved. Viruses that slide through with other programs and disable or fool the virus checker itself are particularly worrisome.

In the future, we'll see increased reliance on "integrity checking" antiviral programs that audit the integrity signature of known programs rather than relying solely on the virus signature code. So-called "rule-based monitoring" programs that look for generally suspicious, virus-like activity or behavior rather than the viruses themselves, are also promising.

Another, more permanent, hardware-based virus solution lies in hard-disk write protection, or "programmable write protection." This feature involves encoding a feature in the PC's ROM BIOS (read-only memory, basic input/output system) that allows you to prevent programs from writing to the disk's critical partition table, FAT, or boot sector, or to executable files. Software-based viruses reportedly would be unable to override such a feature. Already, one major BIOS manufacturer, American Megatrends, Inc. (AMI), has introduced such a BIOS chip.

Summing Up. We've cut through virus hype to examine what viruses are and what they do. We glimpsed various virus types and discussed other rogues. We looked at how infectors spread and whether you can consider your PC and software safe; how to diagnose, identify, and remove viruses; and what it takes to defend against hackers. We also introduced the virus busters; suggested ways to defend yourself against infectors; sampled commercial and shareware antiviral software; and discussed the future of virus protection. We also made suggestions on rounding-out your bookshelf.

The question still remains: are viruses a scourge or a scam? Although we've provided some useful guidelines, the bottom line is you'll have to decide that one for yourself. ■

Be a computer repair expert!

CAREER-LEVEL HOME STUDY

Learn PC repairs, troubleshooting, servicing, upgrading, installation. Increase your value as an employee or open your own business.

No expensive instruments, no high-tech electronics. Over 90% of PC repairs and service involve easy mechanical procedures or parts replacements. **Send or call for free literature.**

800-223-4542

Name_____ Age____

Address_____ Phone ( )____

City_____ State____ Zip____

The School of PC Repair

6065 Roswell Road

Dept. JK341, Atlanta, Georgia 30328

CIRCLE 12 ON FREE INFORMATION CARD

TEST TOOLS

(Continued from page 46)

PNP unit) turns on, completing the ground path for LED2 (the green LED), causing it to light. If, on the other hand, the probe tip is touched to a point in the circuit that is at logic high (+5 volts), Q1 (the 2N4401 NPN unit) turns on, completing the ground path for LED1 (the red LED), causing it to light. If the probe tip is touched to a point in the circuit that is floating, both LED's will turn on simultaneously. To protect the LED's, each unit is powered through its own 330-ohm current-limiting resistor (R1 and R2).

Construction. A template for the Digital Logic Probe's printed-circuit board is shown in Fig. 4. Although the author's prototype unit was built with that layout, a printed-circuit board is really not needed; the circuit can easily be built on a small piece of perfboard. With either method, try to make the board a size that fits snugly into the enclosure; once again, a coin tube is used. If the board is made too small, it will probably end up rattling around inside the enclosure while being used, which can be somewhat annoying.

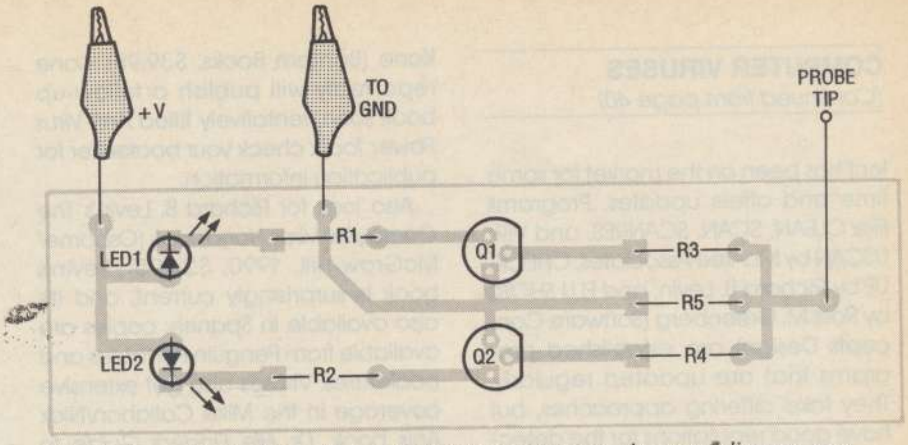

Fig. 5. Assemble the Digital Logic Probe using this parts-placement diagram as a guide. Once complete, the board can be housed in an enclosure just like the one used for the Continuity Tester (see text for details).

Although the enclosure that houses the Digital Logic Probe is the same as that used for the Continuity Tester, it's a little more difficult to screw on the coin holder's cover. That's because the short length of wire that connects the printed-circuit board to the probe tip (which is mounted to the coin-holder's cover) twists as the cover is install. If the wire is twisted too tight, it will snap. To prevent that from happening, you can pre-counter-twist the wire (that is, before attempting to install the cover, twist the wire in a direction opposite to that to tighten the cover). By pre-counter-twisting the wire, the wire will be untwisted as the lid is install, lessening wire stress and thereby making the wire less likely to break away from the board. ■

PHASE-LOCKED LOOPS

(Continued from page 65)

modulation) data transmission, regenerative repeaters, CRT (cathode-ray tube) scanning, and/or drum-memory synchronization.

AM Detection. The basic PLL circuit can be converted to a synchronous amplitude-modulation (AM) detector by adding a non-critical phase-shift network, an analog multiplier, and an external low-pass filter to the basic PLL system. A block diagram of such a system is shown in Fig. 5. In AM detection applications, the PLL operates on the so called coherent AM-detection principle, where the amplitude-modulated input signal is mixed with an unmodulated, coherent carrier signal, which is then low-pass filtered—the low-pass filtered output of the multiplier represents the demodulated intelligence. The AM detector of Fig. 5 also has another feature; the output of the PLL's internal low-pass filter can be used as an FM detector or frequency discriminator. Therefore, the system in Fig. 5 is capable of simultaneous AM and FM detection; meaning that frequency- and amplitude-modulated information can be separated and simultaneously demodulated.

Tone Detection. In this application, the PLL is once again connected as shown in Fig. 5. When the signal tone presented to the input of the circuit is within the frequency band corresponding to the capture range of the PLL, the DC output voltage is shifted from its no-tone level. That shift is then easily converted to a logic signal via a threshold detector with logic-level compatible outputs.

Motor Speed Control. Many electromechanical systems, such as magnetic tape drives and disc or drum-head drivers require precise speed control. That can be accomplish using a PLL system configured in the manner outlined in Fig. 6. In that diagram, the VCO section of the PLL is separated from the phase comparator and used to generate a voltage-controlled reference frequency (f_R). The motor shaft and the tachometer output provide a second signal frequency (f_M), which is compared to the reference frequency. The controller is a power amplifier that is used to provide drive power for the speed control windings of the motor. In that way, the motor/tachometer combination essentially functions as a VCO that is phase locked to the voltage-controlled reference frequency.

Stereo Decoding. In commercial FM broadcasting, suppressed-carrier AM is used to superimpose stereo information on the FM signal. To demodulate that complex stereo signal, a low-level pilot tone is transmitted at 19 kHz (half of the actual carrier frequency). The PLL can be used to lock onto that pilot tone, and regenerate a coherent 38 kHz carrier, which can then be used to demodulate the complete stereo signal. ■

ELECTRONICS MARKET PLACE

FOR SALE

SECRET cable descramblers! Build your own descrambler for **less** than $12.00 in **seven easy steps. Radio Shack** parts list and **free** descrambling methods that **cost nothing** to try, included. Send $10.00 to: **INFORMATION FACTORY,** Dept. 5, PO Box 1790, Baytown, TX 77522.

RADIATION detector — test for hazardous electromagnetic radiation from power lines, appliances. $25.00 with battery: **FABATE,** Box 143, Hillsdale, NJ 07642.

STUN Guns, pepper sprays, portable locks and alarms. SASE: **VICTCO,** Box 31261, Dept. 13, Charleston, SC 29417.

ELECTRONICS SECURITY PRODUCTS Comprehensive, state-of-the-art spy-surveillance catalog. Service, savings and smarts. (212) 683-2219.

CABLE test chips. Jerrold, Tocom, S.A., Zenith. Puts cable boxes into full service mode! $29.95 to $59.95. 1 (800) 452-7090, (310) 867-0081.

CLASSIFIED AD ORDER FORM

To run your own classified ad, put one word on each of the lines below and send this form along with your check to:

Popular Electronics Classified Ads, 500-B Bi-County Boulevard, Farmingdale, N.Y. 11735

PLEASE INDICATE in which category of classified advertising you wish your ad to appear. For special headings, there is a surcharge of **$11.00.**

( ) Plans/Kits ( ) Business Opportunities ( ) For Sale
( ) Education/Instruction ( ) Wanted ( ) Satellite Television
( ) _____

Special Category: $11.00

PLEASE PRINT EACH WORD SEPARATELY, IN BLOCK LETTERS.

(No refunds or credits for typesetting errors can be made unless you clearly print or type your copy.) Rates indicated are for standard style classified ads only. See below for additional charges for special ads. **Minimum: 15 words.**

1	2	3	4	5
6	7	8	9	10
11	12	13	14	15 ($23.25)
16 ($24.80)	17 ($26.35)	18 ($27.90)	19 ($29.45)	20 ($31.00)
21 ($32.55)	22 ($34.10)	23 ($35.65)	24 ($37.20)	25 ($38.75)
26 ($40.30)	27 ($41.85)	28 ($43.40)	29 ($44.95)	30 ($46.50)
31 ($48.05)	32 ($49.60)	33 ($51.15)	34 ($52.70)	35 ($54.25)

We accept MasterCard and Visa for payment of orders. If you wish to use your credit card to pay for your ad fill in the following additional information (Sorry, no telephone orders can be accepted.):

Card Number _____ Expiration Date _____

PRINT NAME _____ / SIGNATURE _____

IF YOU USE A BOX NUMBER YOU MUST INCLUDE YOUR PERMANENT ADDRESS AND PHONE NUMBER FOR OUR FILES. ADS SUBMITTED WITHOUT THIS INFORMATION WILL NOT BE ACCEPTED.

CLASSIFIED COMMERCIAL RATE: (for firms or individuals offering commercial products or services) $1.55 per word prepaid (no charge for ZIP code)...**MINIMUM 15 WORDS.** 5% discount for same ad in 6 issues within one year; 10% discount for 12 issues within one year if prepaid not applicable on credit card orders. **NON-COMMERCIAL RATE:** (for individuals who want to buy or sell a personal item) $1.25 per word, prepaid....no minimum. **ONLY FIRST WORD AND NAME** set in bold caps at no extra charge. Additional bold face (not available as all caps) **30¢ per word additional.** Entire ad in boldface, $1.85 per word. **TINT SCREEN BEHIND ENTIRE AD:** $1.90 per word. **TINT SCREEN BEHIND ENTIRE AD PLUS ALL BOLD FACE AD:** $2.25 per word. **EXPANDED TYPE AD: $2.05 per word prepaid.** Entire ad in boldface, $2.45 per word. **TINT SCREEN BEHIND ENTIRE EXPANDED TYPE AD:** $2.55 per word. **TINT SCREEN BEHIND ENTIRE EXPANDED TYPE AD PLUS ALL BOLD FACE AD:** $2.95 per word. **DISPLAY ADS:** 1" × 2⅛"—$205.00; 2" × 2⅛—$410.00; 3" × 2⅛"—$615.00. **General Information:** Frequency rates and prepayment discounts are available. **ALL COPY SUBJECT TO PUBLISHERS APPROVAL. ADVERTISEMENTS USING P.O. BOX ADDRESS WILL NOT BE ACCEPTED UNTIL ADVERTISER SUPPLIES PUBLISHER WITH PERMANENT ADDRESS AND PHONE NUMBER. Copy to be in our hands on the 18th of the fourth month preceding the date of issue (i.e.; Sept. issue copy must be received by May 18th). When normal closing date falls on Saturday, Sunday or Holiday, issue closes on preceding work day. Send for the classified brochure. Circle Number 49 on the Free Information Card.**

HUGE 100 page communications catalog of shortwave, amateur and scanner equipment. Antennas, books, and accessories too. Send $1.00 to: **UNIVERSAL RADIO,** 6830 Americana Pkwy., Dept. PE, Reynoldsburg, OH 43068.

300 Experimenters Circuits — Complete in 6 practical books using diodes, relays, FET's, LED's, IC 555's, and IC CA3130's for building blocks. Only $33.00 plus $5.50 for shipping. USA and Canada only. US funds. **ETT, INC.,** PO Box 240, Massapequa Park, NY 11762-0240.

CABLE descrambler liquidation. Major makes and models available. Industry pricing! (Example: Hamlin Combo's, $44 each... Minimum 10 orders). Call **WEST COAST ELECTRONICS,** 1 (800) 628-9656.

CB RADIO OWNERS!

We specialize in a wide variety of technical information, parts and services for CB radios. 10-Meter and FM conversion kits, repair books, plans, high-performance accessories. Thousands of satisfied customers since 1976! Catalog $2.

CBC INTERNATIONAL
P.O. BOX 31500PE, PHOENIX, AZ 85046

CABLE descramblers and turn-on kits. We buy, sell and trade. We'll beat any legitimate price — Call (305) 425-0751.

PROTOTYPE service for hobbyists & engineers. Single quantity ss PCB's. $10.00 minimum. No setup fee. We also scan magazine artwork. Get out your back issues. **FIRST PROTO,** (407) 392-8677.

DESCRAMBLING secrets revealed. Free 24 hour hotline reveals secret satellite and cable descrambling information. (718) 390-7130.

FREE CATALOG

FAMOUS "FIRESTIK" BRAND CB ANTENNAS AND ACCESSORIES. QUALITY PRODUCTS FOR THE SERIOUS CB'er. SINCE 1962

FIRESTIK ANTENNA COMPANY
2614 EAST ADAMS
PHOENIX, ARIZONA 85034

TUBES. (Thousands in stock). Send SASE for list. **FALA ELECTRONICS,** PO Box 1376-2, Milw., WI 53201.

OSCILLOSCOPE 50 MHz, dual channel, solid state calibrated, manual, $250.00. 1 (800) 835-8335 X-123.

TEST-Aids as low as $9.95, for testing units in **full servive** mode. Jerrold; Pioneer, clears E2 thru E5; Pioneer cubes; Pioneer cylinder filters; Tocom 5503/5507; Scientific Atlanta all models; remotes $10.00; 1 (800) 926-4030, (617) 770-3830 sales; (617) 770-2305 tech; **N.E. ENGINEERING.**

ANTIQUE RADIO CLASSIFIED

Free Sample!

Antique Radio's
Largest Circulation Monthly.
Articles, Ads & Classifieds.
6-Month Trial: $16.95. 1-Yr: $29.95 ($44.95-1st Class).
A.R.C., P.O. Box 802-L10 **, Carlisle, MA 01741**

PLANS & KITS

FASCINATING Electronic Devices! Voice Disguiser! Vocal Truth Indicator! Lasers! Transmitters! Detectors! Free energy! High Voltage! More! Kits/Assembled! Catalog $4.00 (refundable) **QUANTUM RESEARCH,** 17919-77th Ave., Edmonton, Alberta, Canada T5T 2S1.

DESCRAMBLER kits. Complete cable kit $44.95. Complete satellite kit $49.95. Add $5.00 shipping. Free brochure. No New York sales. **SUMMIT** PE, Box 489, Bronx, NY 10465. (718) 518-0448.

SURVEILLANCE transmitter kits tune from 65 to 305 MHz. Mains powered duplex, telephone, room, combination telephone/room. Catalog with **Popular Communications, Popular Electronics and Radio-Electronics** book reviews of **"Electronic Eavesdropping Equipment Design,"** $2.00. **SHEFFIELD ELECTRONICS,** PO Box 377785-A, Chicago, IL 60637-7785.

Great kit for electronic buffs. **Silent Sam** Turn Signal reminder. Patent Approved! Best reminder yet. Will not bug you. Sounds briefly & repeats only if you forget to cance. Quiet; braking resets ir. Complete kit of all parts PCB, case & instructions only **$15** PPD. Wired units **$7 more. Visa, MC. (614) 231-8814.** Call for free information sheet. **Silent Sam, 1627 Basil Dr, Columbus, OH 43227.**

60 Solderless Breadboard Projects in two easy-to-read pocket books. Complete with circuit descriptions, schematics, parts layouts, component listings, etc. Both books (BP107 & BP113) only $11.90 plus $3.50 for shipping. USA and Canada only. US funds. **ETT, INC.,** PO Box 240, Massapequa Park, NY 11762-0240.

SURVEILLANCE equipment transmitters, cameras, recorders, nite vision, bug detection. Kits, plans $4.00 for catalog — **SPY LABS,** PO Box 231, Thornwood, NY 10594.

MOTORIZE your hand scanner, no more distorted or crooked images. Plans and schematic, send $20.00 to **UNIQUE MACH. SYSTEMS,** 945 Rosedale Ave., Baltimore, MD 21237.

DESCRAMBLER. Build your own. Complete plans. Parts list. Diagrams. Circuit board. Schematics. Send; $12.95 + $2.00 S&H; **A. GRAY,** 20186A, Halifax, NS, B3R-2L1.

BUILD an Eprom programmer for the 2716, adaptable for the 2732 thru the 27512, for under $50.00. Schematics, send $2.00 and LSASE to: **KEN JIMMERSON,** PO Box 800272, La Grange, GA 30240.

HIGH-tech, educational, useful kits and plans. Send $1.00 for catalog. **LNS TECHNOLOGIES,** 20993 Foothill Blvd., Suite 307P, Hayward, CA 94541-1511.

ALARM systems for your home or office. Install it yourself. Complete systems starting at $159.00. Send $3.00 to **ACTION ALARM** for catalog, 117 West 9th Street, #627, LA, CA 90015.

DESCRAMBLER built right into your TV. Complete plans and instructions send $15.00 to **BERGER ENTERPRISES,** Route 6, Box 209T, Murphy, NC 28906.

BEST BY MAIL

Rates: Write National, Box 5, Sarasota, FL 34230

OF INTEREST TO ALL

VCR REPAIR SECRETS, Popular Brands! Send $10.00 MI-CROTRONICS, 2763(A) Carlisle Drive N., Gretna, LA 70056.

AFFORDABLE GIANT SCREEN Home Theatre System. Free Information: 7601 Ramada, Huntsville, AL 35802-PE.

PERSONAL SUCCESS™ — The Newsletter. Learn how to get healthy, wealthy, witty and wise, and as a bonus, energized! Free details: DAXPUB-(PE), Williamston, MI 48895-0014.

SURROUND SOUND! DO it yourself and $ave! Book $5.00 ppd. Tonamon Press, P.O. Box 633-(PE), La Mesa, CA 91941.

ELECTRONICS EXTRAVAGANZA — COMPLETE Directory sources including closeouts $25 + $2.90 S/H. Myrick Publishing, Dept. 291, 879 West Park Ave., Ocean, NJ 07712.

STAR TREK FANS Wanted For Club! National, Box 32215, Detroit, MI 48232.

FREE CATALOG! National Brand vitamins, up to 60% off! 1-(800)-858-2143.

BODY ALARMS $15.95: 2946-(PE) South Bonn, Wichita, Kansas 67217. (316)942-6957.

PLANS

CONFUSE LIDAR! PLANS, parts, sources to construct laser speed gun confuser. Info pack $3.00, plans $20. Send Check/MO to: M. Wallace & Assoc., POB 267-Paul, Morrison, CO 80465.

MONEYMAKING OPPORTUNITIES

EARN $50-$300 DAILY Using Your Camcorder. Free Information: WCE, Box 9803E, Fountain Valley, CA 92728.

$1,000,000 + WITH YOUR Telephone Answering Machine! Limited Offer: (914)633-3438 Dept.B8. Recorded Details.

BLACKJACK MONEY MAGNET Amazing System. Lose 9 Consecutive Hands And Still Make $2,000/Day. Send $10 to: FRISON, Box 16466, North Hollywood, CA 91615.

TRAVEL

VACATION INCENTIVE PROGRAMS. Learn their advantages know the difference. For more information call: 1-900-288-2605, $1.95 per minute, 4 minute call. 18 + only.

EDUCATION/INSTRUCTION

ELECTRONIC engineering. 8 volumes complete. $109.95. No prior knowledge required. Free brochure. **BANNER TECHNICAL BOOKS,** 1203 Grant Avenue, Rockford, IL 61103.

EARN money now. Repair VCRs at home with this easy to follow, step-by-step video. Actual in-shop fixes. Ten years experience on one video tape. Only $29.95. Call 1 (800) 862-6994. Visa/MC, Disc.

LEARN Digital and Computer Electronics by doing and seeing. Build a Digital Storage Scope with an 8 channel Logic Analyzer that displays 8 signals simultaneously on a large LCD display. Scope kits complete with tutorials start at $199.95. Money back guarantee. **NETRONICS R&D LTD,** (203) 355-2659.

WANTED

WANTED: old tube — type Hi-Fi stereo equipment. Amplifiers, pre-amplifiers, tuners. Any condition considered. Call **ROB,** (310) 652-7434.

BUSINESS OPPORTUNITIES

MAKE $75,000.00 to $250,000.00 yearly or more fixing IBM color monitors. No investment, start doing it from your home (a telephone required). Information, USA, Canada $2.00 cash for brochure, other countries $10.00 US funds. RANDALL DISPLAY, Box 2168-H, Van Nuys, CA 91404, USA.

HOME assembly work available! Guaranteed easy money! Free details! SASE. **HOMEWORK-P,** Box 520, Danville, NH 03819.

FEDERAL loans for small business now available. **1 (800) 777-6342** for free details.

EASY work! Excellent pay! Assemble products at home. Call toll free **1 (800) 467-5566** ext. 5730.

NEED money? Guaranteed employment! Assemble simple products at home. Easy work! Excellent income! **1 (800) 377-6900,** ex7930.

DISTRIBUTORS needed — High profits. Largest selection & lowest prices. Mini-satellite antennas for homes, RV, business, & many new markets. Starting at $296.00 . **1 (800) 886-5008.**

GUARANTEED earn $100.00 per hour repairing VCR's. No electronic experience necessary. Most malfunctions simple mechanical or electro-mechanical. Start repairing the first day! Call 1 (800) 682-6877 or write VCR MASTER SERVICE, 2001 Denison, Denton, TX 76201.

SATELLITE TV

SUPER low satellite prices. Free U.S. and International catalog. **SATMAN,** (309) 692-4140 (Int'l.), 1 (800) 472-8626 in U.S.

SPEAKER BUILDERS

BUILD your own speaker systems using our first class speaker cabinets. Solid MDF cabinets beautifully finished in textured black or with basecoat to paint own color. Call or write for product info and pricelist. **VIRGIN CABINETS,** R.R. #1, Desbarats, Ontario, Canada P0R 1E0 (705) 736-2826.

"YOUR FREE CATALOG KNOCKED MY SOCKS OFF"

We get that sort of comment all the time. People are impressed that our free Consumer Information Catalog lists so many free and low-cost government booklets. There are more than 200 in all, containing a wealth of valuable information.

Our free Catalog will very likely impress you, too. But first you have to get it. Just send your name and address to:

Consumer Information Center
Department KO
Pueblo,
Colorado
81009

A public service of this publication and the Consumer Information Center of the U. S. General Services Administration

Imagine Little Red Riding Hood without a forest.

PLEASE be very careful with matches. Because without the forests, life is unimaginable.

Only You Can Prevent Forest Fires.

Ad Council

SMOKEY

USDA Forest Service and your State Forester.

CABLE TV DESCRAMBLERS
★ CONVERTERS ★
and ACCESSORIES.

SAVE MONEY. DON'T RENT!

PANASONIC, PIONEER, JERROLD, OAK, SCIENTIFIC ATLANTA AND MORE. LOWEST PRICES. FREE CATALOG.

(800) 234-1006
CABLE READY COMPANY

EXERCISE

Does Your Heart Good.

American Heart Association

Your Ticket To

SUCCESS

Over 28,000 technicians have gained admittance worldwide as certified professionals. **Let your ticket start opening doors for you.**

ISCET offers Journeyman certification in Consumer Electronics, Industrial, Medical, Communications, Radar, Computer and Video. For more information, contact the **International Society of Certified Electronics Technicians, 2708 West Berry Street. Fort Worth, TX 76109; (817) 921-9101.**

Name _____

Address _____

City _____

State _____ Zip _____

____ Send material about ISCET and becoming certified.

____ Send one "Study Guide for the Associate Level CET Test." Enclosed is $10 (inc. postage).

ONLY $9.95 EACH

TTL-CMOS BONANZA

The Biggest Budget Buy an Experimenter, Circuit Designer, or Engineer would want!

5 compact pocket guides provide a comprehensive listing of all commonly used TTL and CMOS integrated circuits. All current families including: Standard, Low Power, Schottky, Low Power Schottky, Advanced Schottky, Advanced Low Power Schottky, High Speed and Fast Schottky, and all the commonly used CMOS devices.

They're easy to use! Each page describes one component only and is divided into eight parts, which offer the following: 1—The device's schematic diagram. 2—Logic description. 3—Data on the chip's operational characteristics such as signal levels, etc. 4—Major applications. 5—Summary of essential data. 6—Table of TTL families in which the component is available. 7—Device common name. 8—Type reference number highlighted at the bottom of page for rapid and easy reference.

ORDER THE COMPLETE SET TODAY!

ELECTRONICS TECHNOLOGY TODAY INC.
P.O. Box 240, Massapequa Park, NY 11762-0240

☐ Paying by Check Please charge my ☐ Visa ☐ MasterCard

Card No. _____ Expiration Date _____

Signature _____

Name _____

Address _____

City _____ State _____ Zip _____

US and Canada orders only. Sorry, no Foreign orders.

Each Book is $9.95

☐ **TTL Pocket Guide 7400-74200,** Volume 1

☐ **TTL Pocket Guide 74201-74640,** Volume 2

☐ **TTL Pocket Guide 74641-7430640,** Volume 3

☐ **CMOS Pocket Guide Standard Components,** Volume 1

☐ **CMOS Pocket Guide Special Components,** Volume 2

✓Check Off the Books You Want

Shipping Charges

Under $10.00	**$2.50**
$10.00 to $20.00	**$3.50**
$20.01 to $30.00	**$4.50**
$30.01 to $40.00	**$5.50**
$40.01 to $50.01	**$6.50**
Over $50.00	**$8.00**

☐ Number of books ordered

Total prices of books $ _____

Shipping (See Chart) $ _____

Subtotal $ _____

Sales Tax (NY Only) $ _____

Total Amount $ _____

ALL PAYMENTS MUST BE IN U.S. FUNDS

ADVERTISING SALES OFFICE

Gernsback Publications, Inc.
500-B Bi-County Blvd.
Farmingdale, NY 11735
1-(516) 293-3000

Larry Steckler
President

Christina Estrada
Assistant to the President

For Advertising ONLY
516-293-3000
Fax 1-516-293-3115

Larry Steckler
publisher

Arline Fishman
advertising director

Denise Mullen
advertising assistant

Kelly Twist
credit manager

Subscription/
Customer Service/
Order Entry
1-800-827-0383
7:30 AM - 8:30 PM EST

ADVERTISING SALES OFFICES

EAST/SOUTHEAST

Stanley Levitan
Eastern Sales
1 Overlook Ave.
Great Neck, NY 11021
1-516-487-9357, 1-516-293-3000
Fax 1-516-487-8402

MIDWEST/Texas/Arkansas/
Oklahoma, Colorado, Arizona

Ralph Bergen
Midwest Sales
One Northfield Plaza, Suite 300
Northfield, IL 60093-1214
1-708-446-1444
Fax 1-708-559-0562

PACIFIC COAST/Mountain States

Mike Brooks
Pattis/3M
1800 North Highland Avenue
Suite 717
Hollywood, CA 90028
1-213-462-2700
Fax 1-213-463-0544

ADVERTISING INDEX

POPULAR ELECTRONICS magazine does not assume any responsibility for errors that may appear in the index below.

Free Information No.		Page
8	AMC Sales	28
—	Antique Radio Classified	96
—	CBC International	95
—	CIE	15
—	CLAGGK Inc. Video Offer	21
—	Cable Ready Company	97
—	Command Productions	28
9	Contact East	26
—	Copyright Clearance Center, Inc.	90
—	Electronics Book Club	17, 79
—	Firestik II	96
14	Fluke Manufacturing	CV4
5	Foley-Belsaw Company	91
—	Grantham College	26
6	Heathkit	81
—	ISCET	97
7	Jameco	30
10	Mohawk-Environmental Servs	CV2
—	NRI Schools	25
—	Nu-Tek	95
13	People's College	4
—	Silent Sam TSR Co.	96
—	Silicon Chip Magazine	89
11,12	The School of VCR Repair	29, 93
15	Zentek Corp.	91

BUILD A TEST BENCH

(Continued from page 48)

tery should be considered during operation. The internal resistance of a typical dry-cell battery is between 10 and 100 ohms. Considering the cost of batteries these days, you may want to use an AC wall adaptor as a power source for lengthy operation. If the external power supply is used, a resistor (R4) should be added in series with the source to simulate the internal resistance of a dry-cell.

In the author's unit, a 22-ohm, ½-watt resistor was used for resistor R4. To prevent charging B1, a reverse-biased diode is used as an automatic change-over switch. If external power is removed, the battery automatically takes over. If the battery you use for your unit is a rechargeable, you can omit diode D1 and choose a value for R4 to limit charging current.

If the Test Bench Amplifier is incorporated into another project, and made to share the same power supply, such as a high-gain preamplifier, use a 100-ohm resistor for R4 and increase the value of C4 to 100 μF to increase isolation from other circuitry and prevent unwanted feedback.

The normal speaker load impedance for the LM386 is 16 ohms or greater. An 8-ohm speaker can be used, however, provided that the supply voltage is clamped at 9 volts or less to prevent overheating U1. If you must use a 4 ohm speaker, further reduce the supply to 6 volts to keep U1 happy.

Using the Project. The Test Bench Amplifier can come in handy in a wide variety of applications. For instance, it can be used when checking out a new circuit or repairing audio products. In addition, it can be used around the house with an inductive pickup coil to trace concealed (in-wall) AC wiring or to allow the whole family to listen in when a favorite relative visits by telephone. It makes a great extension amp for boosting the output of headphone-style personal radios. (Stereo sound, of course, requires that you build two such amplifiers, one for each channel.) In any event, once you build it, you are sure to find many applications for this versatile and useful circuit. ■

GET TURNED ON!

Want to stay informed in the ever changing world of mobile and home electronics? Tune into SIGHTS & SOUNDS, the only video magazine dedicated to the newest and hottest products in the electronic marketplace.

Every week we report on the latest market trends, share product reviews as well as informative interviews with industry leaders.

It's all designed to keep you turned on to innovative electronics technology.

Uniden Bearcat Scanners

On August 7, SIGHTS & SOUNDS gives you the inside track on the personal & mobile electronics market, join as we go behind the scenes at industry giant Uniden.

With as many as 200 programmable channels, and 800 MHz police and weather, you won't miss a moment of the action with Uniden scanners.

(800) 772-7497

SIGHTS & SOUNDS

Saturday's at 4:30 E.S.T. on **CNBC**.

WTDI Worldwide Target Demographic Television

PAID PROGRAMMING

305-427-9655

Multi-Choice.

Whether you're doing first-level troubleshooting or component-level diagnosis, Fluke meters offer you one of the widest choice of capabilities and price ranges in the industry. Choices ranging from the basic Fluke 12 with auto function V-Chek™ and Continuity Capture™. To the classic Fluke 77 with Auto Touch Hold® and current measurements.

Fluke 77
The classic Multimeter
$169.00

To the advanced Fluke 83 with Min/Max/Average recording, Frequency, Duty Cycle and Input Alert™. Plus a full line of quality accessories to extend those capabilities even further. No matter which Fluke meter you choose, you can count on precise, reliable, consistent performance year in and year out. Plus, strong customer support and product warranties that measure up to any in the industry. Make the choice that gives you the most choices.

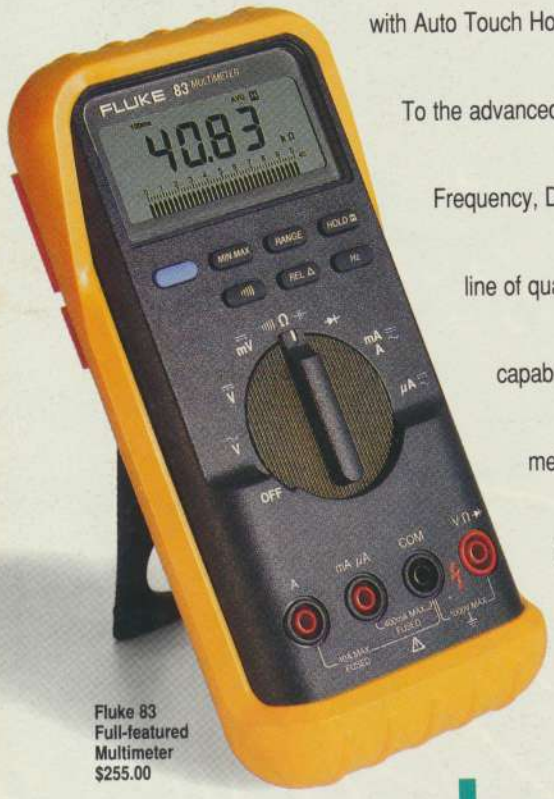

Fluke 83
Full-featured Multimeter
$255.00

Look to Fluke for the tools you need to get the job done right.

See your Fluke distributor, or call 1-800-87-FLUKE for a catalog and the name of the distributor nearest you.

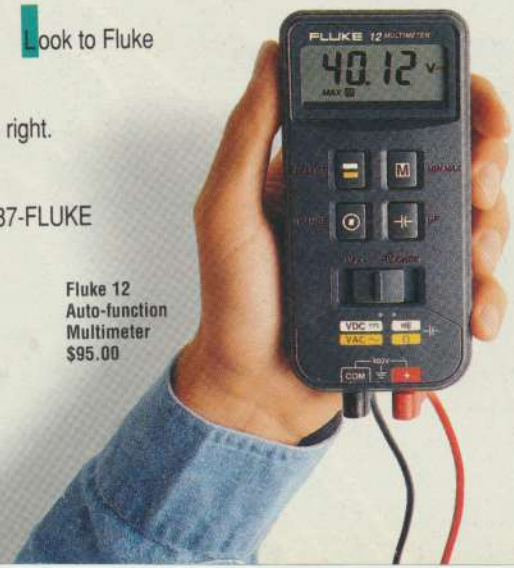

Fluke 12
Auto-function Multimeter
$95.00

FLUKE 12	FLUKE 77	FLUKE 83
The Fluke meters listed above feature DC/AC voltage, resistance, audible continuity and diode test.		
Capacitance measurements	Auto Touch Hold®	Auto Touch Hold® and Relative modes
V Chek™ (auto function)	Current measurements	Current measurements
Min/Max Record with Relative Time Stamp	Analog/Digital display	Analog/Digital display
Two-year warranty	Three-year warranty	Three-year warranty
Continuity Capture™	Yellow holster with Flex Stand™	Yellow holster with Flex Stand™
Basic accuracy 0.9%	Basic accuracy 0.3%	Input Alert™
	For measurements to 4800 V-A	Capacitance measurements
		Frequency and Duty Cycle
		Min/Max/Avg. Recording
		Basic Accuracy 0.3%

John Fluke Mfg. Co., Inc.
P.O. Box 9090, Everett, WA 98206
For more information call:
(416) 890-7600 in Canada
(206) 356-5500 from other countries

©Copyright 1993. John Fluke Mfg. Co., Inc. All rights reserved. Prices subject to change. Suggested U.S. list price. Ad No 00377

FLUKE®

CIRCLE 14 ON FREE INFORMATION CARD

Here are your free *FactCards!*

Introducing Popular Electronics *FactCards.*

Each issue, **Popular Electronics** will present 3 new *FactCards,* each dealing with one of a variety of electronics topics. Some will deal with electronics basics, some will deal with discrete components, some will deal with IC's, and some will deal with circuits and applications.

All will contain the type of information electronics hobbyists need, but sometimes must search to find. With *FactCards,* you can find that information in a hurry.

Clip your cards, save them, and start building your *FactCards* library today!

Popular Electronics

259 Popular Electronics FactCard — APPLICATIONS CIRCUITS

PRACTICAL DIFFERENTIATOR

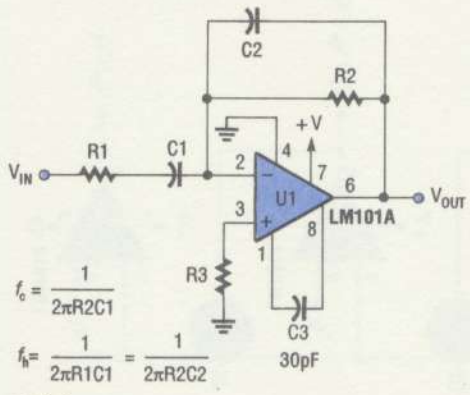

$f_c = \frac{1}{2\pi R2C1}$

$f_h = \frac{1}{2\pi R1C1} = \frac{1}{2\pi R2C2}$

$f_c < f_h < f_{unity\ gain}$

CURRENT TO VOLTAGE CONVERTER

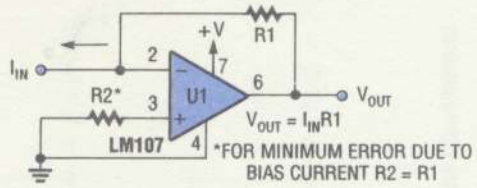

FREE-RUNNING MULTIVIBRATOR

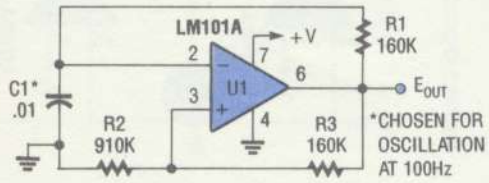

260 Popular Electronics FactCard — APPLICATIONS CIRCUITS

WEIN-BRIDGE OSCILLATOR WITH FET AMPLITUDE STABILIZATION

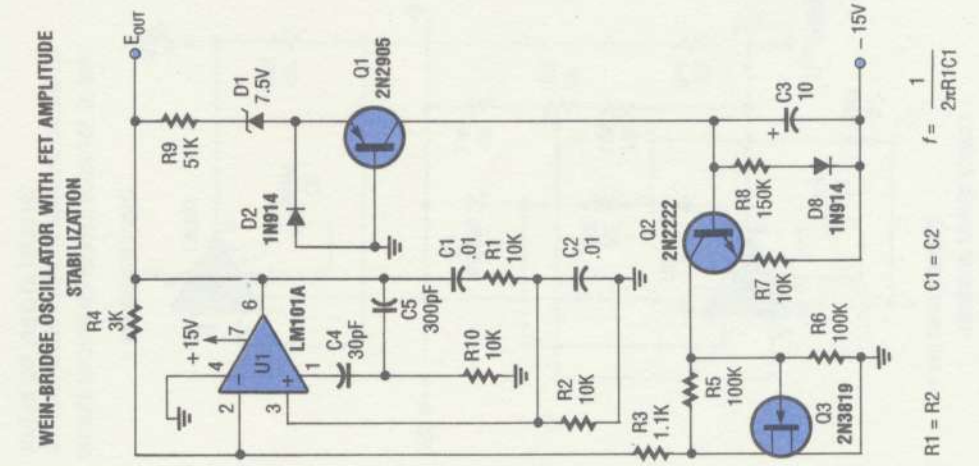

261 Popular Electronics FactCard — APPLICATIONS CIRCUITS

STEREO TV DECODER

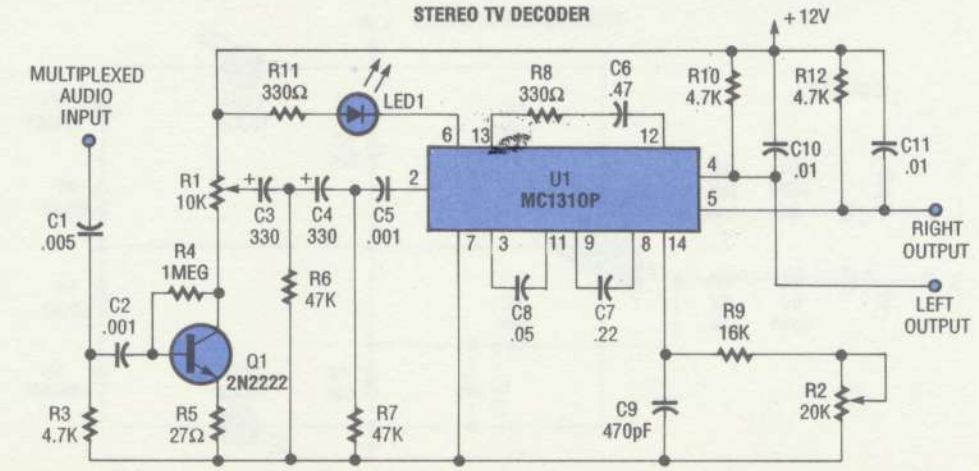

259 Popular Electronics FactCard — APPLICATIONS CIRCUITS

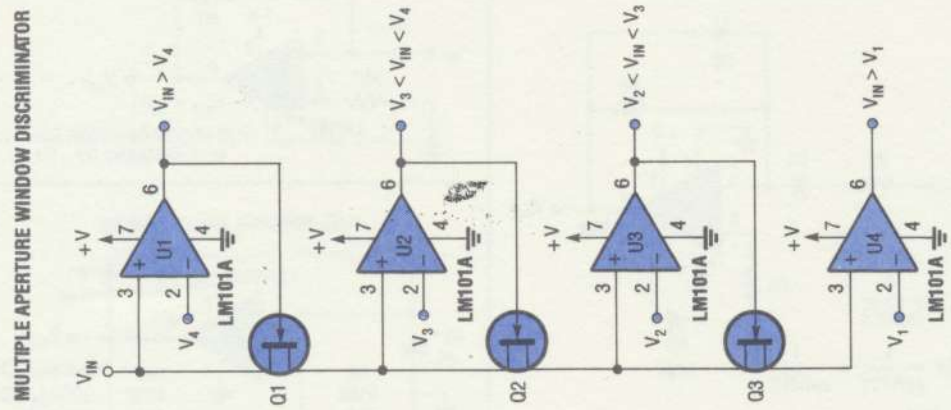

260 Popular Electronics FactCard — APPLICATIONS CIRCUITS

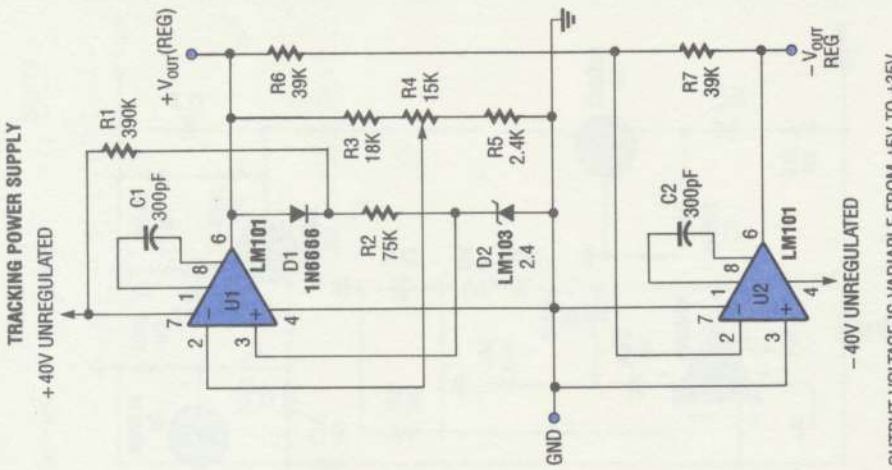

261 Popular Electronics FactCard — APPLICATIONS CIRCUITS

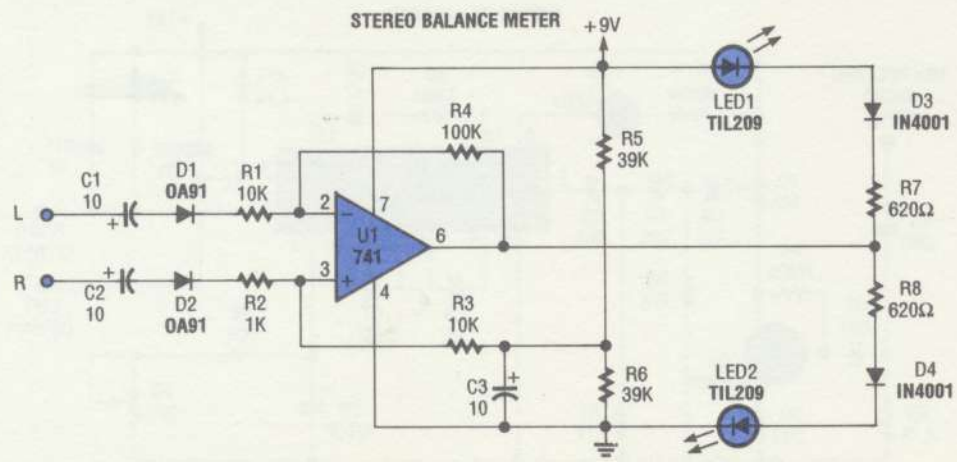

For the best in hobby electronics read Popular Electronics

During the next 12 months

Popular Electronics will feature timely and informative articles that help you get the most from your hobby. Each issue will include:

- Exciting construction projects for the beginning and advanced builder
- News and reviews on the hottest new consumer and hobby gear
- Helpful hints and circuits that are an experimenter's delight
- Technology articles that entertain while they teach
- Stories and columns that cover every important part of our hobby from antique radio to computers
- and much more!

Don't take a chance on missing even one exciting issue. Subscribe now and save!

The magazine for the electronics activist and the consumer electronics enthusiast!

The best in hobby electronics appears each and every month in Popular Electronics!

Subscribe Today!